ORDER NO.MAD0605017CE

Service Manual

DVD Recorder

DMR-EH65EC / DMR-EH65EP

Vol.1

Colour

(K).....Black Type

(S).....Silver Type

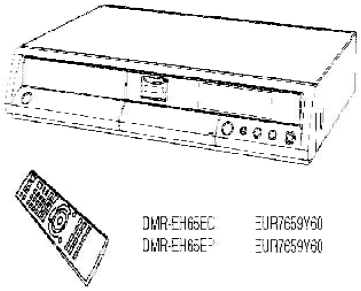

SPECIFICATIONS

NOTE:
This model's RAM / Digital P.C.B
Module are - RFKNEH65EC
- RFKNEH65EP

CAUTION:
Pairing of RAM Drive and Digital P.C.B. as "RAM / DIGITAL P.C.B. MODULE" have to be replaced together. If the pairing is changed, RAM Drive unit has to be re-aligned. Because the alignment data for RAM Drive Unit is stored in Digital P.C.B.

When replacing with Main P.C.B. or EEPROM, "UNFORMAT" indication is displayed and HDD must be formatted.

When replacing with HDD, it is necessary to update the firmware. Please prepare the update disc.
(After that, FORMAT is necessary)

After that, **programme in the HDD will be lost.**
In detail, please refer to each content in this service manual.

Manufactured under license from Dolby Laboratories. "Dolby" and double-D symbol are trademarks of Dolby Laboratories.

"DTS" and "DTS 2.0 + Digital Out" are trademarks of Digital Theater Systems, Inc.

• SD logo is a trademark.
• Portions of this product are protected under copyright law and are provided under license by ARIS/SOLANA/4C.
• miniSD™ is a trademark of SD Card Association.

Apparatus Claims of U.S. Patent Nos. 4,631,603, 4,577,216, and 4,819,098, licensed for limited viewing uses only.

HDAVI Control™ is a trademark of Matsushita Electric Industrial Co., Ltd.

G-CODE is a registred trademark of Gemstar Development Corporation. The G-CODE system is manufactured under license from Gemstar Development Corporation.

HDMI, the HDMI logo and High-Definition Multimedia Interface are trademarks or registered trademarks of HDMI Licensing LLC.

MPEG Layer-3 audio decoding technology licensed from Fraunhofer IIS and Thomson multimedia.

This product incorporates copyright protection technology that is protected by method claims of certain U.S. patents and other intellectual property rights owned by Macrovision Corporation and other rights owners. Use of this copyright protection technology must be authorized by Macrovision Corporation, and is intended for home and other limited viewing uses only unless otherwise authorized by Macrovision Corporation. Reverse engineering or disassembly is prohibited.

Official DivX Certified™ product.
Plays DivX®5, DivX®4, Div®3, and Div® VOD video content (in compliance with DivX Certified™ technical requirements).
DivX, DivX Certified, and associated logos are trademarks of DivXNetworks, Inc. and are used under license.

© 2006 Matsushita Electric Industrial CO., Ltd. All rights reserved.
Unauthorized copying and distribution is a violation of law.

⚠ WARNING

1. SAFETY PRECAUTIONS

1.1. GENERAL GUIDELINES

1. **Be careful during removing metal parts, sharp edges.**
2. **When servicing, observe the original lead dress. If a short circuit is found, replace all parts which have been overheated or damaged by the short circuit.**
3. **After servicing, see to it that all the protective devices such as insulation barriers, insulation papers shields are properly installed.**
4. **After servicing, make the following leakage current checks to prevent**

the customer from being exposed to shock hazards.

1.1.1. LEAKAGE CURRENT COLD CHECK

1. Unplug the AC cord and connect a jumper between the two prongs on the plug.
2. Measure the resistance value, with an ohmmeter, between the jumpered AC plug and each exposed metallic cabinet part on the equipment such as screw heads, connectors, control shafts, etc. When the exposed metallic part has a return path to the chassis, the reading should be between 1M Ω and 5.2M Ω . / When the exposed metal does not have a return path to the chassis, the reading must be infinity.

Figure 1

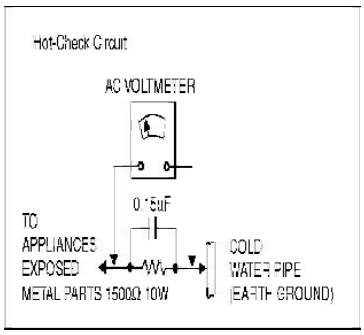

1.1.2. LEAKAGE CURRENT HOT CHECK

1. Plug the AC cord directly into the AC outlet. Do not use an isolation transformer for this check.
2. Connect a 1.5k , 10 watts resistor, in parallel with a 0.15 F capacitors, between each exposed metallic part on the set and a good earth ground such as a water pipe, as shown in Figure 1.
3. Use an AC voltmeter, with 1000 ohms/volt or more sensitivity, to measure the potential across the resistor.
4. Check each exposed metallic part, and measure the voltage at each point.
5. Reverse the AC plug in the AC outlet and repeat each of the above measurements.
6. The potential at any point should not exceed 0.75 volts RMS. A leakage current tester (Simpson Model 229 or equivalent) may be used to make the hot checks, leakage current must not exceed 1/2 milliampere. In case a measurement is outside of the limits specified, there is a possibility of a shock hazard, and the equipment should be repaired

and rechecked before it is returned to the customer.

2. WARNING

2.1. PREVENTION OF ELECTROSTATIC DISCHARGE (ESD) TO ELECTROSTATIC SENSITIVE (ES) DEVICES

Some semiconductor (solid state) devices can be damaged easily by static electricity. Such components commonly are called Electrostatic Sensitive (ES) Devices. Examples of typical ES devices are integrated circuits and some field-effect transistor-sand semiconductor "chip" components. The following techniques should be used to help reduce the incidence of component damage caused by electrostatic discharge (ESD).

1. Immediately before handling any semiconductor component or semiconductor-equipped assembly, drain off any ESD on your body by touching a known earth ground. Alternatively, obtain and wear a commercially available discharging ESD wrist strap, which should be removed for potential shock reasons prior to applying power to the unit under test.
2. After removing an electrical assembly equipped with ES devices, place the assembly on a conductive surface such as aluminum foil, to prevent electrostatic charge buildup or exposure of the assembly.
3. Use only a grounded-tip soldering iron to solder or unsolder ES devices.
4. Use only an anti-static solder removal device. Some solder removal devices not classified as "anti-static (ESD protected)" can generate electrical charge sufficient
   to damage ES devices.
5. Do not use freon-propelled chemicals. These can generate electrical charges sufficient to damage ES devices.
6. Do not remove a replacement ES device from its protective package until immediately before you are ready to install it. (Most replacement ES devices are packaged with leads electrically shorted together by conductive foam, aluminum foil or comparable conductive material).
7. Immediately before removing the protective material from the leads of a replacement ES device, touch the protective material to the chassis or circuit assembly into which the device will be installed.
   Caution
   Be sure no power is applied to the chassis or circuit, and observe all other safety precautions.

8. **Minimize bodily motions when handling unpackaged replacement ES devices. (Otherwise hamless motion such as the brushing together of your clothes fabric or the lifting of your foot from a carpeted floor can generate static electricity sufficient to damage an ES device).**

IMPORTANT SAFETY NOTICE

There are special components used in this equipment which are important for safety.
These parts are marked by ⚠ in the schematic diagrams, Exploded Views and replacement parts list.
It is essential that these critical parts should be replaced with manufacturer's specified parts to prevent shock, fire, or other hazards. Do not modify the original design without permission of manufacturer.

2.2. PRECAUTION OF LASER DIODE

CAUTION:

This product utilizes a laser diode with the unit turned "on",
invisible laser radiation is emitted from the pickup lens.
Wave length: 662 nm (DVDs)/795 nm (CDs)
Maximum output radiation power from pickup: 100 μW/VDE.
Laser radiation from the pickup lens is safety level, but be sure
the followings:

1. **Do not disassemble the optical pickup unit, since radiation from exposed laser diode is dangerous.**
2. **Do not adjust the variable resistor on the pickup unit. It was already adjusted.**
3. **Do not look at the focus lens using optical instruments.**
4. **Recommend not to look at pickup lens for a long time.**

ACHTUNG:

Dieses Produkt enthält eine Laserdiode.
Im eingeschalteten Zustand wird unsichtbare Laserstrahlung von der
Lasereinheit ausgestrahlt.
Wellenlänge: 662 nm(DVDs)/795 nm (CDs)
Maximale Strahlungsleistung der Lasereinheit: 100 VDE.
Die Strahlung der eingeschalteten Lasereinheit ist ungefährlich, wenn
folgende Punkte beachtet werden:

1. **Die Lasereinheit nicht zerlegen, da die Strahlung a der freigelegten Laserdiode gefährlich ist.**
2. **Den werksseitig justierten Einstellregler der Lasereinheit nicht verstellen.**
3. **Nicht in die Fokussierlinse blicken.**
4. **Auch nicht mit optischen Instrumenten in die Fokussierlinse blicken.**

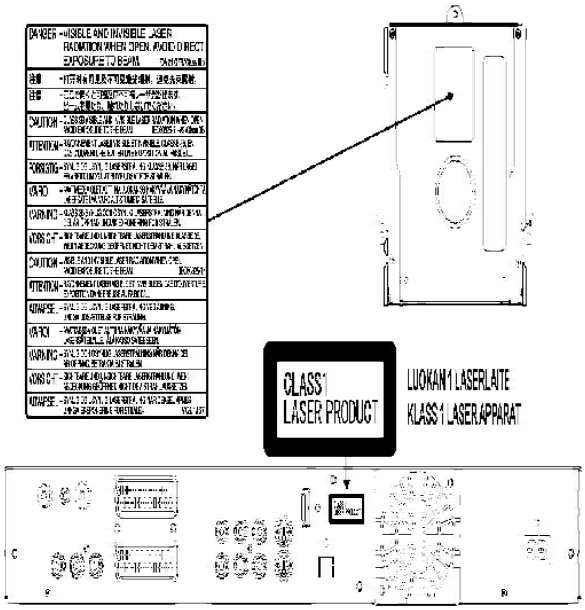

CAUTION
THIS PRODUCT UTILIZES A LASER
USE OF CONTROLS OR ADJUSTMENTS OR PERFORMANCE OF PROCEDURES OTHER THAN THOSE SPECIFIED HEREIN MAY RESULT IN HAZARDOUS RADIATION EXPOSURE

2.3. SERVICE CAUTION BASED ON LEGAL RESTRICTIONS

General description about Lead Free Solder (PbF)

- **The lead free solder has been used in the mounting process of all electrical components on the printed circuit boards used for this equipment in considering the globally environmental conservation.**
- **The normal solder is the alloy of tin (Sn) and lead (Pb). On the other hand, the lead free solder is the alloy mainly consists of tin (Sn), silver (Ag) and Copper (Cu), and the melting point of the lead free solder is higher approx.30 degrees C (86°F) more than that of the normal solder.**

Service caution for repair work using Lead Free Solder (PbF)

- **The lead free solder has to be used when repairing the equipment for which the lead free solder is used.**
- **To put lead free solder, it should be well molten and mixed with the original lead free solder.**
- **Remove the remaining lead free solder on the PCB cleanly for soldering of the new IC.**
- **Since the melting point of the lead free solder is higher than that of the normal lead solder, it takes the longer time to melt the lead free solder.**
- **Use the soldering iron (more than 70W) equipped with the temperature**

control after setting the temperature
at 350±30 degrees C (662±86°F). When soldering or unsoldering, please completely remove all of the solder
on the pins or solder area and be sure to heat the soldering points with the Pb free solder until it melts enough.

Definition of PCB Lead Free Solder being used

- The letter of "Pbf is printed either foil side or component side using the lead free solder.

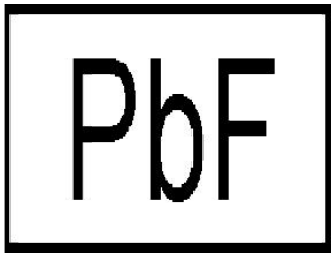

Recommended Lead Free Solder (Service Parts Route.)

- The following 3 types of lead free solder are available through the service parts route.
  RFKZ03D01K----------(0.3mm 100g Reel)
  RFKZ06D01K----------(0.6mm 100g Reel)
  RFKZ10D01K----------(1.0mm 100g Reel)

Note

- Ingredient: tin (Sn), 96.5%, silver (Ag) 3.0%, Copper (Cu) 0.5%, Cobalt (Co) / Germanium (Ge) 0.1 to 0.3%

3. SERVICE NAVIGATION

3.1. SERVICE INFORMATION

This service manual contains technical which will alow service personnel's to understand and service this model.
Please place orders using the parts list and not the drawing reference numbers.
If the circuit is changed or modified, this information will be followed by supplement service manual to be filed with
original service manual.

1. This service manual does not contain the following information, because of the impossibility of sevicing at component level.

- Schematic Diagram, Block Diagram and P.C.B. layout of RAM/ Digital P.C.B. Module.
- Parts List for individual parts of RAM/Digital P.C.B. Module.
- Exploded View and Parts List for individual parts of RAM/Digital P.C.B. Module.

2. The following category are recycle module part. Please send them to Central Repair Center.

- RAM/Digital P.C.B. Module: RFKNEH65EC
- RAM/Digital P.C.B. Module: RFKNEH65EP

3.2. CAUTION FOR DivX

Please give the information "Warning for Customers who use the DivX Video-on-Demand content." always to the customer
together with the product, if you have to exchange EEPROM, P.C.B. including EEPROM or the product itself.
Also attach these information to every service part (EEPROM or P.C.B. including EEPROM).
This complete Information is needed for every customer who is using the DivX Video-on-Demand Serivce.
Appendix:
*** Parts that memorize user's information are only on the EEPROM.**
*** The registration of Registration Code is possible for half a year up to 6 recorders up to 10 recorders a year.**
Every replacement of EEPROM or P.C.B. including EEPROM spends one of this.

- Registration Code is memorized in the EEPROM (RFKFxxxxxxx)
- If the Power & Digital I/F P.C.B. or the EEPROM will be changed a new Registration Code
  different from the previous one will be generated.
- In this case the customer, who is useing DivX Video-on-Demand sercive, can not longer play any content that
  was or is purchased under that old registration code.
- Therefore the customer will need to register a new registration code.

4. SPECIFICATION

Power supply:	**AC220-240 V, 50/60 Hz**
Power consumption:	**34 W ±1,3 W** **Power save mode 2 W ± 0,4 W**
Dimensions and Mass:	**430 (W) x 329 (D) x 58 (H) mm** **(excluding protrusions) / 4.2 kg**
Operating temperature range:	**+5 to +40 °C**
Operating humility range:	**10 to 80 % RH (no condensation)**
Pickup Laser power:	**CLASS1**
Pickup Wave length:	**DVD 662 nm / CD 780 nm** **No hazardous radiation is emitted** **with the safety protection**
(NORSK) BØLGELENGDE:	**DVD 662 nm / CD 780 nm**
Laserstyrke	**Ingen farling stråling sendes ut**
Recording system:	**MPEG2 (Hybrid VBR)** **Audio: Dolby Digital 2CH**
Signal system:	**PAL 625/50, NTSC 525/60**
DVD Region number:	**Region No. 2**
Internal Hard Disc Drive:	**250 GB**
DVD Recording / Playable discs:	**DVD-RAM (12 cm 4.7 GB)** **DVD-RAM (12 cm 9.4 GB)** **DVD-RAM (8 cm 2.8 GB)** **DVD-R (12 cm 4.7 GB)** **DVD-R (8 cm 1.4 GB)** **DVD-RW (12 cm 4.7GB)** **DVD+R (12 cm 4.7 GB)** **DVD+RW (12 cm 4.7 GB)**
DVD approximate Recording time:	**XP: 10 MBps (60 min)** **SP: 5 MBps (120 min)** **LP: 3 MBps (240 min)** **EP: 1.7 / 1.2 MBps (360 - 480 min)**
Additional playable discs:	**DVD-RAM (VR format)** **DVD-RW (VR format)** **DVD-R (MP3, DivX, JPG)** **DVD-R DL, DVD+R DL**

	DVD-R DL, DVD+R DL DVD-Video, DVD-Audio CD-Audio (CD-DA), Video CD SVCD (IEC62107) CD-R, CD-RW (CD-DA, MP3, DivX, JPG, VCD)
TV tuner system EC/EP-Model:	VHF: E2-E12, A-H2 (Italy)
PAL-BGH, SECAM-BG (CCIR)	UHF: CH21-CH69
	CATV: S01-S05 (S1-S3)
SECAM-L (France)	VHF: 2-10, UHF: 21-69
EC-Model	CATV: CH B -CH Q
	CATV: CH S21 - CH S41
EP-Model PAL-DK, SECAM-DKK1	OIRT VHF: CH R1 - CH R12
	OIRT UHF: CH 21 - CH 69
	OIRT CATV: CH 44MHz - 470MHz
EP-Model PAL-BGH, SECAM-BG	CCIR VHF: CH E2 - CH E12
	CCIR UHF: CH E21 - CH E69
	CCIR CATV: S01 - S05
	CCIR CATV: CH M1 - CH M10
	CCIR CATV: CH U1 - CH U10
	CCIR CATV: CH S21 - CH S41
EP-Model PAL-I	VHF: CH 4 - CH 13
	UHF: CH 21 - CH 68
RF Converter Output:	not provided
SD Card Slot:	JPEG (Still Picture DCF Standard) TIFF (uncompressed) MPEG2 (rec. by Panasonic cam)
Campatible Cards:	SD Card, Multimedia Card miniSD Card (with adapter)
Card format:	FAT12, FAT16
Card picture pixels:	34x34 to 6144x4096

Video input AV1 / AV2:	**21 pin connector (1.0 Vp-p 75 Ω)**
Video input AV3 / AV4:	**pin jack connector (1.0 Vp-p 75 Ω)**
S-Video input AV1 / AV2:	**21 pin connector (Y: 1.0 Vp-p, C: 0.3 Vp-p 75 Ω)**
S-Video input AV3 / AV4:	**pin jack connector (Y: 1.0 Vp-p, C: 0.3 Vp-p 75 Ω)**
RGB Video input AV3 (PAL):	**21 pin connector (0.7 Vp-p 75 Ω)**
DV input:	**IEEE 1394 Standard 4 pin**
Video output AV1 / AV2:	**21 pin connector (1.0 Vp-p 75 Ω)**
FBAS Video output (composit):	**pin jack connector (1.0 Vp-p 75 Ω)**
S-Video output AV1:	**21 pin connector (1.0 Vp-p 75 Ω)**
S-Video output (cinch):	**pin jack connector (1.0 Vp-p 75 Ω)**
S-Video output:	**S connector (1.0 Vp-p 75 Ω)**
RGB Video output AV1:	**21 pin connector (0.7 Vp-p 75 Ω)**
Component Video output:	**Y pin jack (1.0 Vp-p 75 Ω)** **PB pin jack (0.7 Vp-p 75 Ω)** **PR pin jack (0.7 Vp-p 75)**
HDMI output (19 pin type A):	**Version 1.2a (EDID Vers. 1.3)**
Audio input AV1 / AV2:	**21 pin connector (-6 dBV 500 mV)**
Audio input AV3 / AV4:	**pin jack (-6 dBV 500 mV)**
Audio output (cinch):	**pin jack (-6 dBV 500 mV)**
Optical output:	**PCM, Dolby Digital, DTS, MPEG**

Note:
Specifications are subject to change without notice.
Mass and dimensions are approximate.

Build-in decoders: You can play discs with following symbols

5. NEW FEATURE

5.1. ABOUT DivX

5.1.1. GENERAL

DivX is a new video compressing format that is applied
MPEG-4 technology to improve quality and the compressibility and it is developed by the DivXNetworks, Inc., Video file of high resolution and the high picture quality can be made thought it is a high compressibility.
DivX codec is necessary for converting video to DivX file and playback files made.

5.1.2. OPERATING INSTRUCTIONS ABOUT DivX VIDEO-ON-DEMAND CONTENT

DivX Video-on-Demand (VOD) content is encrypted for copyright protection. In order to play DivX VOD content on this unit, you first need to register the unit.
Follow the online instructions for purchasing DivX VOD content to enter unit's registration code and register unit. Visit www.divx.com/vod for mor information.
Display unit's registration code:

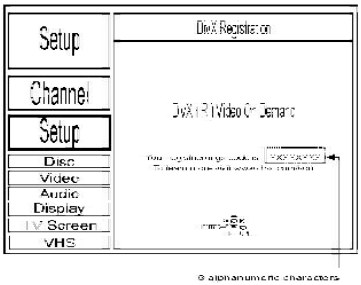

- We recommend that you make a note of this code for future reference.
- After playing DivX VOD content for first time, another registration code is then displayed in "DivX Registration". do not use this registration code to purchase DivX VOD content. If you use this code to purchase DivX VOD content and the play content on this unit, you will no longer be able to play any content that you purchased using previous code.
- If you purchase DivX VOD content using a registration code different from this unit's code, you will not be able to play this content. ("Authorization Error" is displayed.)

Some DivX VOD content can only be played a set number of times.
When you play this content, remaining number of plays is displayed. You cannot play this content when number of remaining plays is zero. ("Rental Expired" is displayed.)
When playing this content

- Number of remaining plays is reduced by one if
- you press [POWER]
- you press [STOP]
- you press [backwards SKIP], / [backwards SLOW / SEARCH] or / [forwards SLOW / SEARCH] / etc. and arrive at another content or start of content being played.
- scheduled [DRIVE SELECT] to change drive

*** Resume functions do not work.**

Typical Playback procedure of DivX VOD / (Video On Demand):

Case 1	When DivX VOD is used newly.
Case 2	When EEPROM or P.C.B. includin EEPROM was replaced for repairing.
Case 3	When recorder was exchanged to another recorder for repairing.
Case 4	When customer own second recorder.
Case 5	When owner of recorder was changed to another.

CASE 1	WHEN DivX IS USED NEWLY

Registration Code display (code is an example)

Case 1

Activation: File obtaining (code/ID are examples)

Activation: File Playback

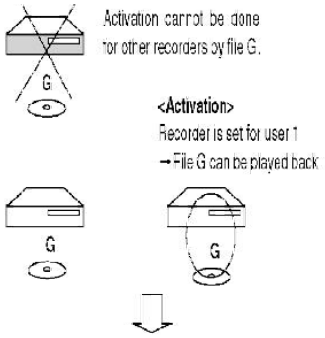

Registration Code display (code is an example)

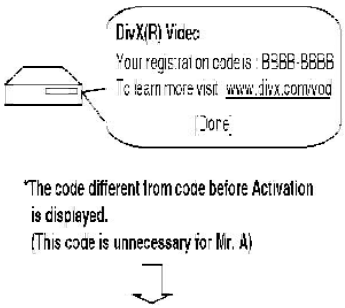

*The code different from code before Activation is displayed.
(This code is unnecessary for Mr. A)

Ovtainment/Playback of additional file after Activation (code/ID is an example)

CASE 2	**WHEN EEPROM OR P.C.B. INCLUDING EEPROM WAS REPLACED FOR REPAIRING**
CASE 3	**WHEN RECORDER WAS EXCHANGED TO ANOTHER RECORDER FOR REPAIRING**

New Registration Code is displayed (code is an example)

Case 2

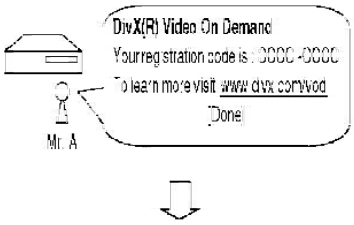

Activation: File obtaining (code/ID are example)

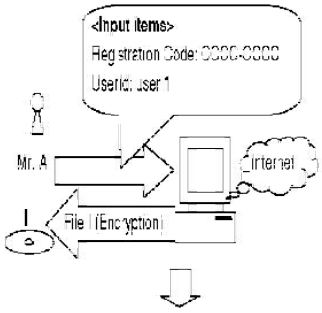

Activation: File Playback

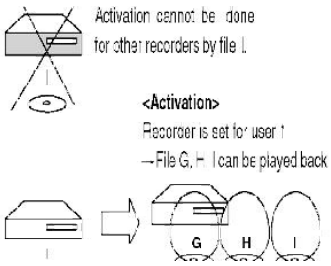

Registration Code display after Activation (example)

Obtainment/Playback od additional file after Activation
(code/ID is an example)

Case 3

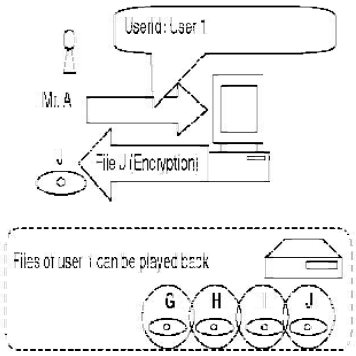

CASE 4	WHEN CUSTOMER OWN SECOND RECORDER

Registration Code display of second recorder (code is an example)

Case 4

Activation: File obtaining (code/ID are example)

Activation: File Playback

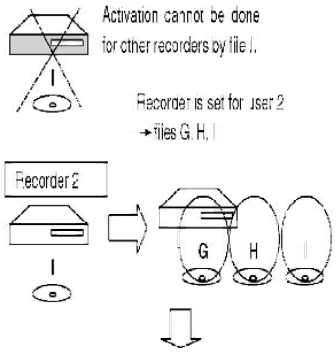

Registration Code display after Activation (example)

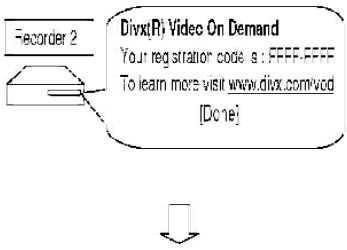

Obtainment/Playback od additional file after Activation
(code/ID is an example)

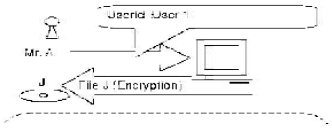

CASE 5	WHEN OWNER OF RECORDER WAS CHANGED TO ANOTHER

Case 5

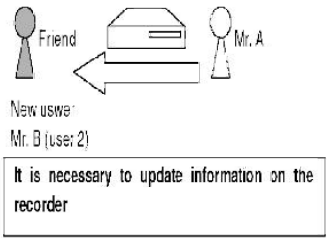

Activation

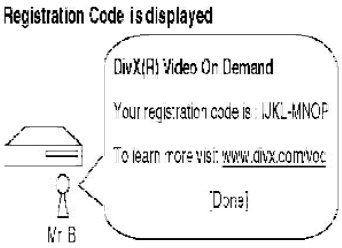

Activation: File obtaining (code/ID are example)

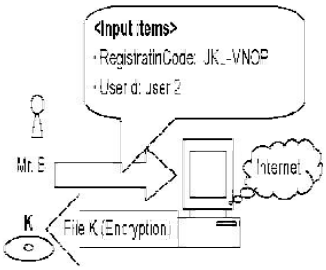

Activation: File Playback

FILE KIND

(There are two kinf of Activation files as follows too.)

- Rental: There is a playback limitation

- Purchase: Unrestricted

Also there is next file as DRM files besides the above-mentioned.

- Base: / It is not necessary to approve though the contents is being endode. / If it is recorder/player for DRM, any can play back. (It is the

same as usual DivX file when seeing from user.)

SCREEN SHIFT (Error display)

Wheter approval is OK or not.
Wheter the recorder is corresponding to User information on the file or not.

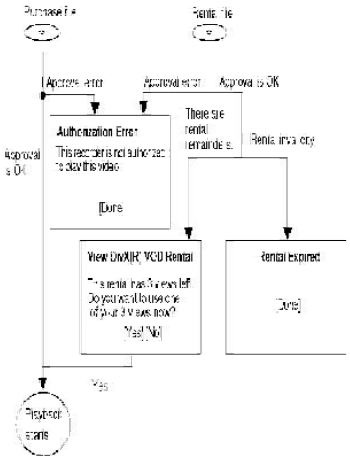

5.1.3. ABOUT DivX DRM

Divx file includes file to which DRM(Digital Right Management) is applied and file not applied. This item is a content that relates only in treating file to which DRM is applied.

1. Registration Code display function

2. User's registration and approval function

3. Rental management function

5.1.3.1. REGISTRATION CODE DISPLAY FUNCTION

Registration Code is alphanumeric character sequence 8 bytes inputted as recorder information, in case a use purchases or rent a DivX DRM file in a network. Registration code is a character sequence generated at random, and differs in each recorder. Moreover, Registration code is updated by new user authentication ever if same recorder.

5.1.3.2. USER'S REGISTRATION AND APPROVAL FUNCTION

- Only one user can register for one recorder. If user's registration is not done with the recorder, DivX file cannot be played back.
- User's registration is performed only when a DivX DRM file is first chosen by recorder
- DivX DRM file that can perform user's registration is only a file that is registered Registration Code and purchased or rented.
- User authentication is performed whenever DivX DRM file is played back. Error message is displayed when failing in user's registration and approval.

5.1.3.3. RENTAL MANAGEMENT FUNCTION

There are purchase file without registration of number of playback and rental files with registration of number of playback as Divx file. Number of playback of rental file is counted by the recorder. When rental file is played, remaining number of times that can be played back will be shown to users, recorder

requests users to input yes or no. Following specifications have been installed for the rental files in the purpose to clarify the count condition of number of times of playback.

- Conditions on counting number of times of play.

1. When a file was opened successfully. (At the time of playback start)
2. When you have done review operation from the start. (Skip to file head)

   - At this time, remaining number of times that can be played back and confirmation message [Do you play really?] are displayed.
   - When the playback point has been skipped to the top of title, number of playback is not counted if the top of title was not recognized.
   - Even if the power failure occurs after start of playback of rental file, number of times of playback counted at start of the playback is held as it is. (Though playback stops by power failure, the number of times of playback is not counted.)

When it has reached head of title, the playback is ended, and screen becomes DivX menu (There is no resume) and then cursor is located on title that has been played back.Then if the same file was continuously played back, it begins to playback from the file head.

Note:

Above mentioned stored user information and number of times of playback are not erased by update of firmware or by initialization by test mode.

5.2. HDAVI CONTROL (HDMI LINK)

Linked operations by HDAVI Control (HDMI Link)

5.2.1. WHAT IS HDMI

HDMI is abbreviation of [High-Definition Multimedia Interface], and is digital interface standard for next generation TV corresponding to follows.

1. Non-compressing high quality digital image
2. Digital transmission of multi channel digital audio.
3. Two way communication of control signal of control straightening between equipments.

Cable	Transmission method	Directionality	Transmission signal	Feature
HDMI Cable	Digital (~4.455Gbps)	One-way	Digital image (none-compression high-definition television image)	Clock line in one system and data line i three systems can high-speed communicate high reliability because o balance communication that uses three respectively every one system. Moreover, because high-speed data lin three system can be used at same time has ten of other digital cables times or more transmission ability. And can transmit high-definition televis image of non-compression, 24 bit high sound quality PCM voice of multi-CH of DVD audio (to 6ch) and Bit stream sign of surround to 8ch of DVD video (5.1ch, 6.1ch, and 7.1ch, etc.) as a digital signa no deterioration. It has power supply line and a interacti control signal line communication independent of AV signal, a Cd can an advanced control between equipments. Therefore it can correspond to making AV equipment in the future highly a network.
		One-way	Digital Audio (6ch/24 bit high sound quality PCM of DVD audio/Bit stream of surround to 8ch of DVD video)	
		Interactive	Digital control signal (Advanced control between equipments)	

Pin Name

1	TMDS Data2(+)	11	TMDS Clock(shield)
2	TMDS Data2(shield)	12	TMDS Clock(-)
3	TMDS Data2(-)	13	CEC (Linked operation control)

5.2.2. LINK FUNCTIONS

Functions
(1) Automatic Input switch
(2) Link of Power

5.2.3. OUTLINE OF EQUIPMENTS LINKED FUNCTIONS

1. Automatic Input switch

At starting of playback / GUI (Graphical User Interface) display by DIGA, it turn on power of VIErA, and it displays picture of DIGA onto screen of

VIErA.

A. Starting of playback:

It includes automatic playback of DVD-Video and so on. And it includes picture of screen saver too.

B. GUI display:

FUNCTIONS, DIRECT NAVIGATOR, TV PROGRAM, PROG/CHECK, Timer Recording, G-code, Initial setting, Playback setting, Play list, SD/DVD guide, Warning messages that user can select and so on.

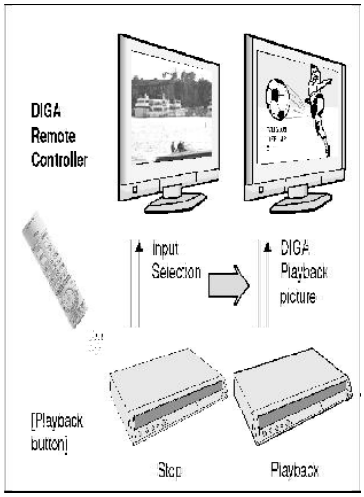

2. Power Link

Power of DIGA is turned off linking to POWER OFF of VIErA.

- Power not turned on linking to POWER ON of VIErA.
- It is limited in following cases that DIGA links to POWER OFF of VIErA.
- During EE display (While Timer recording is being executed/ Functions is being displayed are included.)

However except cases below.

- During EE display, but manual recording is being executing/during EXT_Link recording.
- During Tray is being opened.
- Case that DIGA is in status that power cannot turn off (during dubbing, during finalize).

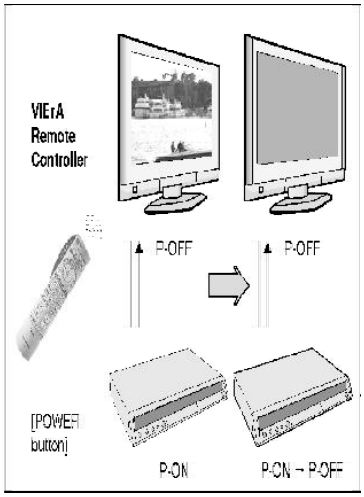

6. LOCATION OF CONTROLS AND COMPONENTS

7. OPERATING INSTRUCTIONS

7.1. TAKING OUT THE DISC FROM DVD-DRIVE UNIT WHEN THE DISC CANNOT BE EJECTED BY OPEN/CLOSE BUTTON

7.1.1. FORCIBLE DISC EJECT

7.1.1.1. WHEN THE POWER CAN BE TURNED OFF

1. **Turn off the power and press [STOP], [CH UP] keys on the front panel simultaneously for 5 seconds.**

7.1.1.2. WHEN THE POWER CAN NOT BE TURNED OFF

1. **Press [POWER] key on the front panel for over 10 seconds to turn off the power forcibly and press [STOP] [CH UP] keys on the front panel simultaneously for 5 seconds.**

7.1.2. WHEN THE FORCIBLE DISC EJECT CAN NOT BE DONE

1. **Turn off the power and pull out AC cord.**
2. **Remove the Top Case.**
3. **Put deck so that bottom can be seen.**
4. **Push SLIDE CAM by Eject Pin (JZS0484) or minus screw driver (small) in the direction of arrow to eject tray slightly.**

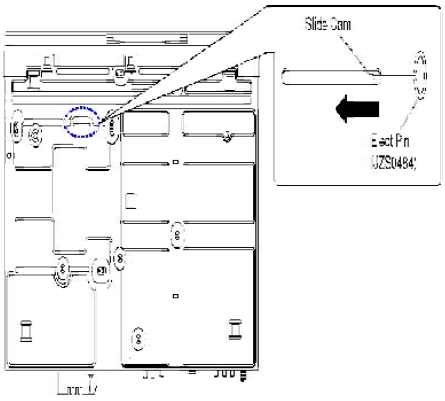

5. Put deck upward and push out Tray by Eject Pin (JZS0484) or minus screw driver (small).

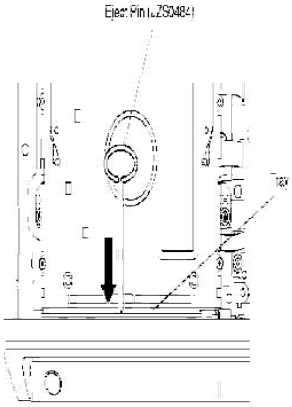

8. SERVICE MODE

8.1. SELF-DIAGNOSIS AND SPECIAL MODE SETTING

8.1.1. SELF-DIAGNOSIS FUNCTIONS

Self-Diagnosis Function provides information for errors to service personnel by "Self-Diagnosis Display" when any error has occurred.
U, H** and F** are stored in memory and held.**
You can check latest error code by transmitting [0] [1] of Remote Controller in Service Mode.
Automatic Display on FL will be cancelled when the power is turned off or AC input is turned off during self-diagnosis display is ON.

Error Code	Diagnosis contents	Description	Monitor Display	Automatic FL displa
IR ERR	IR communication error	[IR ERR] is displayed when communication between Timer microprocessor and IR microprocessor fails.	No display	
No REC	Recording is impossible	[No REC] is displayed when recording is impossible due to the defect, dirt or wound of media.	No display	
U30	Remote control code error	Display appears when main unit and remote controller codes are not matched.	No display	"*" is remote controller code of the main unit. Display for 5 seconds.
U59	Abnormal inner temperature detected	Display appears when the drive temperature exceeds 70°C. The power is turned off forcibly. For 30 minutes after this, all key entries are disabled. (Fan motor operates at the highest speed for the first 5 minutes. For the remaining 25 minutes, fan motor is also stopped.) The event is saved in memory as well.	No display	"U59 is displayed for 3 minutes.
U61	The unit is carrying out its recovery process (with no disc in the disc tray).	* The unit detected an error while recording or playing with with no disc in the disc tray. The unit is carrying out its recovery process. This process restores the unit to normal operation. The unit is not broken. Wait until the message disappears.	No display	
U88	The unit is carrying out its recovery process (with no disc in the disc tray).	* The unit detected an error while recording or playing with with no disc in the disc tray. The unit is carrying out its recovery process. This process restores the unit to normal operation. The unit is not broken. Wait until the message disappears.	No display	
U99	Hang-up	Displayed when communication error has occurred between Main microprocessor and Timer microprocessor.	No display	Displayed is left until tl [POWER] key is presse

Error Code	Diagnosis contents	Description	Monitor Display	Automatic FL displa
H19	Inoperative fan motor	When inoperative fan motor is detected after powered on, the power is turned off automatically. The event is saved in memory.	No display	No display
F00	No error information	Initial setting for error code in memory (Error code Initialization is possible with error code initialization and main unit initialization.)	No display	No display
F58	Drive hardware error	When drive unit error is detected, the event is saved in memory.	No display	No display
F34	Initialization error when main microprocessor is started up for program recording	When initialization error is detected after starting up main microprocessor for program recording, the power is turned off automatically. The event is saved in memory.	No display	No display
UN-SUPPORT	Unsupported disc error	*An unsupported format disc was played, although the drive starts normally. *The data format is not supported, although the media type is supported. *Exceptionally in case of the disc is dirty.	“This disc is incompatible.”	Display for 5 seconds.
NO READ	Disc read error	*A disc is flawed or dirty. *A poor quality failed to start. *The track information could not be read.	“Cannot read. Please check the disc.”	
HARD ERR	Drive error	The drive detected a hard error.	“DVD drive error.”	Display for 5 seconds.

Error Code	Diagnosis contents	Description	Monitor Display	Automatic FL displa
SELF CHECK	Restoration operation	Since the power cord fell out during a power failure or operation, it is under restoration operation. *It will OK, if a display disappears automatically. If a display does not disappear, there is the possibility that defective Digital P.C.B. / RAM drive.	No display	
PLEASE WAIT	Unit is in termination process	Unit is in termination process now. “BYE” is displayed and power will be turned off. In case “Quick Start” of setup menu is ON, it is displayed in restoration operation for AC off.	No display	
UN-FORMAT	Unformatted disc error	You have inserted an unformatted DVD-RAM or DVD-RW that is unformatted or recorded on other equipment.	Format: This disc is not formatted properly. Format the disc in DISK MANAGEMENT?	
HDD ERR	[HDD ERR] is displayed when start up of HDD was failed. (Except error of setting of Power on Stand-by)	1. When normal start up was failed 2. When start up at HDD boot was failed 3. When start up from state of P-OFF was failed 4. When start up from state of HDD SLEEP was failed. [HDDERR] is displayed when above each start up of HDD was failed. * In case 1.), tray opens automatically and [HDDERR] is displayed until version up disc is inserted.	No display	
HDD NG	Power on Stand-by setting error	[HDD NG] is displayed when power on Stand-by setting of HDD is NG or when HDD which power on Stand-by is not set to is used. Please try to replace HDD with junine HDD as service parts.	No display	

8.1.2. SPECIAL MODES SETTING

Item		FL display	Key operation
Mode name	Description		Front Key
TEST Mode	*All the main unit's parameters (include tuner) are initialized.		Press [STOP], [CH UP] and [OPEN/CLOSE] ke simultaneously for five seconds when power i off.
Rating password	The audiovisual level setting password is initialized to "Level 8".		Open the tray, and pre [REC] and [PLAY] simultaneously for 5 seconds.
Service Mode	Setting every kind of modes for servicing. *Details are described in "Service Mode".		When the power is off, press [CH UP], [OPEN/ CLOSE] and [REC] key simultaneously for 5 seconds.
Forced disc eject	Removing a disc that cannot be ejected. The tray will open and unit will shift to P-off mode. *When Timer REC is ON or EXT-LINK is ON, execute " Forced disc eject " after releasing Timer REC or EXT-LINK. *This command is not effective during "Child lock" is ON. While Demonstration Lock is being set, this Forced disc eject function is not accepted. If this command was executed while TIMER REC is being set, TIMER REC setting will be kept.	The display before execution leaves.	When the power is off, press [STOP] and [CH keys simultaneously fo seconds.
Child lock/unlock	Set or release "Child Lock".		Press [ENTER] and [RETURN] by remote controller simultaneou until [X-HOLD] is displayed.
NTSC/PAL system select	To switch PAL/NTSC altemately.	The display before execution leaves.	While the power is on (mode), press [STOP] a [OPEN/CLOSE] simultaneously for 5 seconds.

Item		FL display	Key operation
Mode name	Description		Front Key
Forced power-off	When the power button is not effective while power is ON, turn off the power forcibly. *When Timer REC is ON or EXT-LINK is ON, execute “Forced Power-off” after releasing Timer REC or EXT-LINK.	Display in P-off mode.	Press [Power] key ove than 10 seconds.
Aging	Perform sequence of modes as * Aging Description shown below continually. Caution: All programs in DVD-RAM disc will be deleted because Formatting is done once in Aging process.	Display following the then mode.	When the power is ON, press [STOP], [POWER and [OPEN/CLOSE] simultaneously for ove seconds and less than seconds. NOTE1: If Unit has not turned i Aging mode by operati shown above, execute TEST MODE once and execute operation sho above. (*All the main unit’s parameters include tur are initialized by TEST mode.) NOTE2: If the unit has hung-up because of pressing k for over 10 seconds, o turn off the power, and execute this command *When releasing Aging mode, press [POWER]

Item		FL display	Key operation
Mode name	Description		Front Key
Aging Contents (Example):			
Demonstration lock/unlock	**Ejection of the disc is prohibited. The lock setting is effective until unlocking the tray and not released by "Main unit initialization" of service mode.**	***When lock the tray.** **"LOCK" is displayed for 3 seconds.**	**When the power is on, press [STOP] and [POWER] keys simultaneously for 5 seconds.**
		***When unlock the tray.** **"UNLOCK" is displayed for 3 seconds.**	**When the power is on, press [STOP] and [POWER] keys simultaneously for 5 seconds.**
		***When press OPEN/ CLOSE key while the tray being locked.** **Display "LOCK" for 3 seconds.**	**Press [OPEN/CLOSE] k while the tray being locked.**

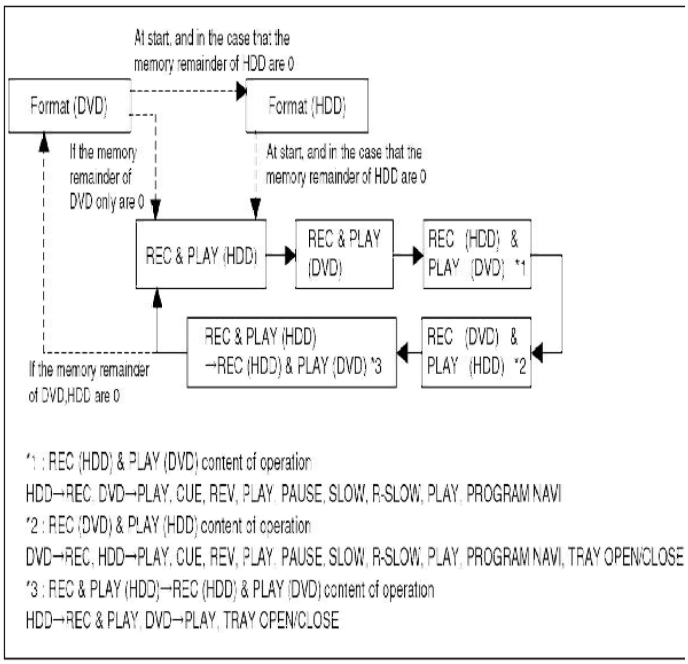

Item		FL display	Key operation
Mode name	Description		Front Key
ATP re-execution	Re-execute ATP.	Display at ATP executing.	When the power is on (mode), press [CH UP] a [CH DOWN] simultaneously for 5 seconds.
Progressive initialization	The progressive setting is initialized to Interlace.	The display before execution leaves.	When the power is on (mode), press [STOP] a [PLAY] simultaneously 5 seconds.

8.1.3. SERVICE MODES AT A GLANCE

Service mode setting: While the power is off, press [REC], [CH UP] and [OPEN/CLOSE] simultaneously for five seconds.

Item		FL display	Key operation
Mode name	Description		(Remote controller k
Release Items	Item of Service Mode executing is cancelled.		Press [0] [0] or [Return service mode.
Error Code Display	Last Error Code of U/H/F held by Timer is displayed on FL. *Details are described in “Self-Diagnosis Functions”.	If any error history dose not exist, [F00] is displayed.	Press [0] [1] in service mode

Item		FL display	Key operation
Mode name	Description		(Remote controller k
ROM Version Display	1. Region code (displayed for 5 sec.) 2. Main firm version (displayed for 5 sec.) 3. Timer firm version (displayed for 5 sec.) 4. Drive firm version (displayed for 5 sec.) 5. ROM correction version (left displayed)	1. 2. 3. 4. 5. ‘’ ” are version displays.	Press [0] [2] in service mode
White Picture Output	White picture is output as component Output from AV Decoder. *White picture (Saturation rate : 100%) *It is enable to switch Interlace/ Progressive by “I/P switch: [1] [4]”	*Initial mode is “Interlace”.	Press [1] [1] in service mode.
		Switch Interlace/ Progressive	Press [1] [4] in White Picture Output mode. *I/P are switched alternately.
Magenta Picture Output	Magenta picture is output with Component Output from AV Decoder. *Magenta picture (Saturation rate: 100%) *It is enable to switch Interlace/ Progressive by “I/P switch: [1] [4]”	*Initial mode is “Interlace”.	Press [1] [2] in service mode.
		Switch Interlace/ Progressive	Press [1] [4] in Magent Picture Output mode. *I/P are switched alternately.

Item		FL display	Key operation
Mode name	Description		(Remote controller k
RTSC Return in XP (A & V)	AV1 input signal is encoded (XP), decoded (XP) and output decoded signal to external without DISC recording and DISC playback.	Initial mode: EE2/ Interlace/ XP/ Audio 48kHz	Press [1] [3] in service mode.
		Switch Interlace/ Progressive	Press [1] [4] in RTSC Return XP mode. *I/P are switched alternately.
		Audio 44.1 kHz/ 48 kHz Switch	Press [2] [4] in RTSC Return XP mode. *48 kHz / 44.1 kHz are switched alternately.
I/P Switch	Switch Interlace and Progressive in EE mode. *Initial setting is “Interlace”. *This command is effective during executing “White Picture Output”, “Magenta Picture Output” and “RTSC Return in XP (A & V)” modes.	Initial mode is Interlace Switch Interlace/ Progressive	Press [1] [4] in I/P Swit mode. *I/P are switched alternately.
Audio Mute (XTMUTE)	Check whether mute is applied normally by the timer microprocessor.		Press [2] [1] in service mode.
Audio Mute (XDMUTE)	Check whether mute is applied normally by the Digital P.C.B..		Press [2] [2] in service mode.
Audio Pattern Output	The audio pattern stored in the internal memory is output (Lch: 1kHz/-18dB) (Rch: 400Hz/-18dB) *Audio sound clock switching operation of DAC can be confirmed by sub command [2] [4].	Initial mode (Audio 48kHz)	Press [2] [3] in service mode.
		Audio 44.1kHz/48kHz switching	Press [2] [4] in Audio Pattern Output mode. *48 kHz / 44.1 kHz are switched alternately.

Item		FL display	Key operation
Mode name	Description		(Remote controller k
HDD READ inspection	Perform a complete read inspection of the HDD.	When the HDD is OK If the HDD is defective : Judge of Forward rate. * When normal (Forward rate is 35 Mbps or more and there is no HDD error): is Space. * When Abnormal (Forward rate is less than 35 Mbps or HDD error existing): is X. : Number of what have spent time for seeking is over 100ms. * When normal: are spaces. * When Abnormal: Display Number of what have spent time fore seeking over 100 ms. However, if the number is more than 100, display [XX]. We judge it is normal that the number is less than 4.	Press [3] [1] in the serv mode. * When canceling the checking mode while executing, do “forced power-off”. Method: Press the “POWER” button more than 10 seconds.
Laser Used Time Indiction	Check laser used time (hours) of drive.	(*****) is the used time display in hour. Laser used time of DVD / CD in Playback/ Recording mode is counted.	Press [4] [1] in service mode.
Delete the Laser Used Time	Laser used time stored in the memory of the unit is deleted.		Press [9] [5] in service mode.

Item		FL display	Key operation
Mode name	Description		(Remote controller k
RAM Drive Last Error	RAM Drive error code display. *For details about the drive error code, refer to the Service Manual for the specific RAM Drive.	1. Error Number is displayed for 5 seconds. 2. Time when the error has occurred is displayed for 5 seconds. DD: Day hh: Hour mm: Minute 3. Last Drive Error (1/2) is displayed for 5 seconds. 4. Last Drive Error (2/2) is displayed for 5 seconds. 5. Error occurring Disc type is displayed for 5 seconds. 6. Disc Maker ID is displayed for 5 seconds. 7. Factor of Drive Error occurring is left displayed	Press [4] [2] in service mode. When “INFO******” is being displayed, past 1 error histories can be displayed by pressing [1] - [1] [9] In case that the maker cannot be identified, display is black out.
Delete the Last Drive Error	Delete the Last Drive Error information stored on the DVD RAM-Drive.		Press [9] [6] in service mode.

Item		FL display	Key operation
Mode name	Description		(Remote controller k
Laser power confirmation	Drive state is judged based on difference between laser power value at shipping and present laser power value.	If DVD-RAM disc in not inserted, [NO DISC] is displayed. If power value study was filed, [ERROR] is displayed.	1. Insert DVD-RAM disc into RAM Drive in service mode (Other media are assumed to b correspondence.) 2. Press [4] [4].
Turn on all FL/ LEDs	All segments of FL and all LEDs are turned on.	All segments are turned on.	Press [5] [1] in service mode.
PB HIGH Signal Output	8 pin of AV 1 Jack (PB HIGH terminal) is High (approx. 11V DC).		Press [5] [2] in service mode.
PB MIDDLE Signal Output	8 pin of AV 1 Jack (PB HIGH terminal) is Middle (approx. 5.5V DC)		Press [5] [3] in service mode.
Front connection inspection	Press all front keys and check the connection between Main P.C.B. and Front key Switches.	(1) Each time a key is pressed, segment turned on increases one by one. (2) Total umber of keys that have been pressed.	Press [5] [4] in service mode.
Production Date Display	Display the date when the unit was produced.	YY: Year MM: Month DD: Day	Press [6] [1] in service mode.
Display the accumlated working time	Display the accumulated unit's working time.	(Indicating unit: Second)	Press [6] [4] in service mode.

Item		FL display	Key operation
Mode name	Description		(Remote controller k
Display the Error History	Display the Error History stored on the unit.	Display reason of error for 5 seconds. 01: Defect of Digital P.C.B. (AV DEC / MAIN CPU) 02: Defect of RAM Drive. 03: Defect of Disc. 04: Defect of Digital P.C.B. or Communication Error. 05: Defect of Digital P.C.B. (AV DEC / MAIN CPU) 06: Defect of HDD. Display the time when the error has occurred for 5 seconds. DD: Day hh: Hour mm: Minute Accumulated working time till occuring of the error is left displayed. (Indicating unit: Second)	Press [6] [5] in service mode. Then press [0] [1] ~ [1] the past 19 error histor are displayed.
Delete the Error History	Delete Error History information stored on the unit.		Press [9] [7] in service mode.

Item		FL display	Key operation
Mode name	Description		(Remote controller k
SD card WRITE check	Check SD card WRITE function with SD card slot.	When the WRITE check is OK. When the WRITE check is NG. *Note: The image stored in the SD card will be erased.	Insert a SC card to SD card slot, and press [7] in service mode. * Insert SD card while t power is off. * Check for [CARD SD] display on the FL displ and go on the procedu
AV4(V)/AV1(RGB) I /O Setting	Set input to AV4 (V) and set output to AV1 (RGB) for I/O checking		Press [8] [0] in service mode.
AV2(Y/C)/AV1(V) I/ O Setting	Set input to AV2 (Y/C) and set output to AV1 (V) for I/O checking		Press [8] [1] in service mode.
AV2(V)/AV1(Y/C) I/ O Setting	Set input to AV2 (V) and set output to AV1 (Y/C) for I/O checking		Press [8] [2] in service mode.
AV2(RGB)/AV1(V) I /O Setting	Set input to AV2 (RGB) and set output to AV1 (V) for I/O checking		Press [8] [3] in service mode.
P50(H) Output	Timer Microprocessor IC7501-76 output High signal for AV1-pin 10 passing through inverter (approx. 0V DC at AV1-pin 10).	When OK. When NG.	Press [8] [4] in service mode.
P50(L) Output	Timer Microprocessor IC7501-76 output Low signal for AV1-pin 10 passing through inverter (approx. 4.4V DC at AV1-pin 10).	When OK. When NG.	Press [8] [5] in service mode.
Tray OPEN/ CLOSE Test	The RAM drive tray is opened and closed repeatedly.	“*” is number of open/ close cycle times.	Press [9] [1] in service mode *When releasing this mode, press the [POW button of Remote Controller more than 1 seconds.

Item		FL display	Key operation
Mode name	Description		(Remote controller k
Error code initialization	Initialization of the last error code held by timer (Write in F00)		Press [9] [8] in service mode.
Initialize Service	Last Drive Error, Error history and Error Codes stored on the unit are initialized to factory setting.		Press [9] [9] in service mode.
Finishing service mode	Release Service Mode.	Display in STOP (E-E) mode.	Press power button on front panel or Remote controller in service m

9. SERVICE FIXTURE AND TOOLS

Part Number	Description	Compatibility
RFKZ0260	Extension Cable (Main P.C.B. - RAM/Digital P.C.B. / 88 Pin)	Same as EH50 Series
RFKZ0216	Extension Cable (Main P.C.B. - Power P.C.B. / 23 Pin)	Same as E55 Series
RFKZ0366 (2x)	Extension FFC (HDMI P.C.B. and HDD - RAM/Digital P.C.B. / 40 Pin / 500 mm)	Same as EH55 / EH56 Ser
RFKZ0168	Extension Cable (Power P.C.B. - Fan Motor / 3 Pin)	Same as E50 / E55 Series
RFKZ0339	Extension Cable (Main P.C.B. - HDD / 4 Pin)	Same as EH55 / EH56 Ser
JZS0484	Eject Pin	Same as ES15
RFKZ03D01K	Lead Free Solder (0.3 mm / 100 g Reel)	Same as ES15
RFKZ06D01K	Lead Free Solder (O.6 mm / 100 g Reel)	Same as ES15
RFKZ010D01	Lead Free Solder (1.0 mm / 100 g Reel)	Same as ES15
RFKZ0316	Solder Remover (Lead free 10 W temperature Solder / 180 g)	Same as ES15
RFKZ0328	Flux	Same as ES15
RFKZ0329	Bottle of Flux	Same as ES15

10. ASSEMBLING AND DISASSEMBLING

Caution: Oringal screws shoul be used.

10.1. DISASSEMBLY FLOW CHART

This chart is the procedure for disassembling the casing and inside parts for internal inspection when carrying out the servicing.
To assemble the unit, reverse the steps shown in the chart below.

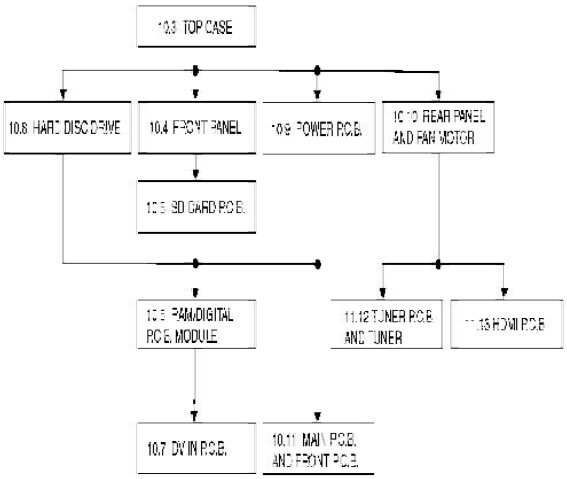

10.2. P.C.B. POSITIONS

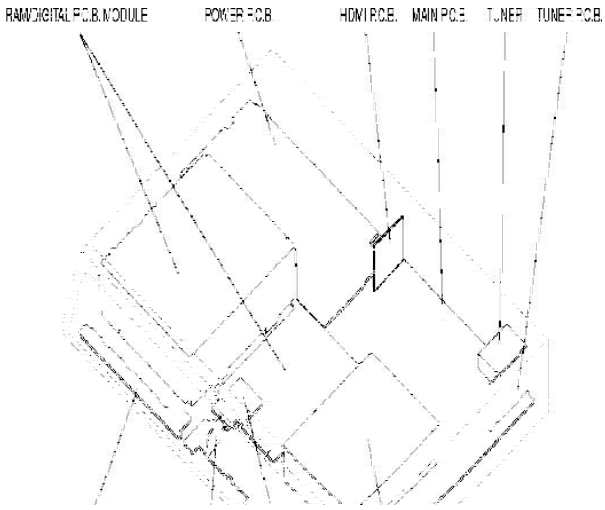

10.3. TOP CASE

1. **Remove the 2 screws (A) and 3 screws (B).**
2. **Slide Top Case rearward and open the both ends at rear side of the Top Case a little and lift the Top Case in the direction of the arrows.**

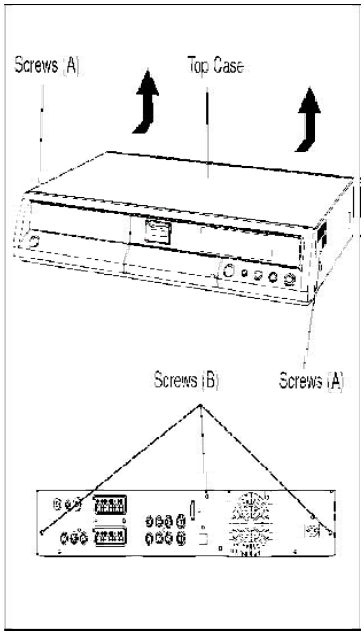

10.4. FRONT PANEL

1. Unlock 2 tabs (A) and 3 tabs (B) in this order to remove Front Panel. The tab (A) and (B) should be unlocked at the same time, respectively.

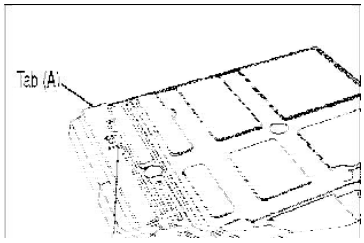

10.5. SD CARD P.C.B.

1. Release FFC

2. Remove 2 Screws (A) to remove SD Card P.C.B. .

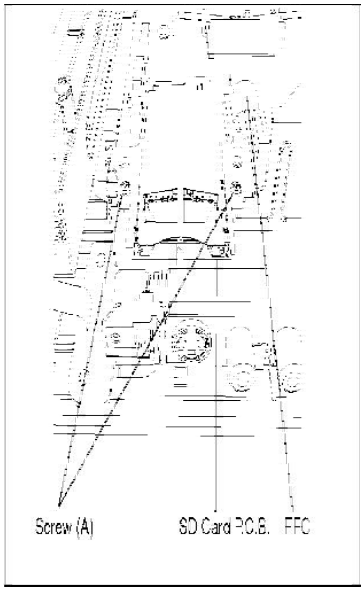

Caution:
When replacing SD Card P.C.B., pay attention as below.

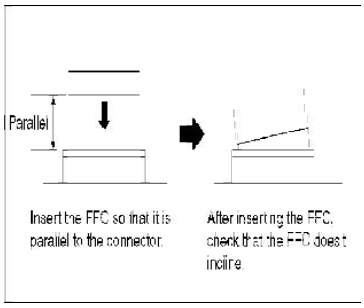

10.6. RAM/DIGITAL P.C.B. MODULE

Caution:

Pairing of RAM Drive and Digital P.C.B. as "RAM / Digital P.C.B. Module" have to be replaced together. If the pairing is changed, RAM Drive unit has to be re-aligned. Because the alignment data for RAM Drive Unit is stored in Digital P.C.B.

Note:
When replacing the Digital P.C.B., "UNFORMAT" indication is displayed and HDD must be formatted.
After that all programme in the HDD will be lost.
How to format the HDD.

- **After "UNFORMAT" is is displayed on the FL display, / warning message for HDD format is appeared on the / TV screen.**
- **Select "YES" and press "ENTER" button on the / remote control; the HDD will be formatted automatically.**
- **After that all programme in the HDD will be lost.**

Caution:
When replacing Digital P.C.B., pay attention as below.

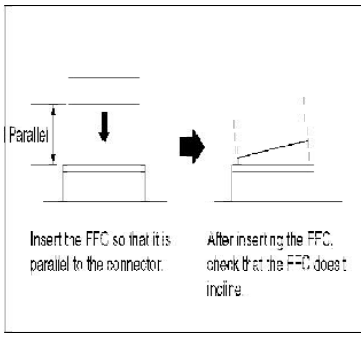

1. Remove 3 Screws on DVD-RAM Drive.

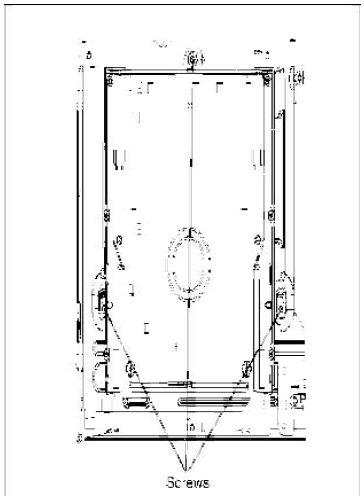

2. Remove 2 FFCs and 4 Screws.

3. Lift up Digital P.C.B. slightly to disconnect Main P.C.B. Connector and DV IN P.C.B. Connector on the bottom side.

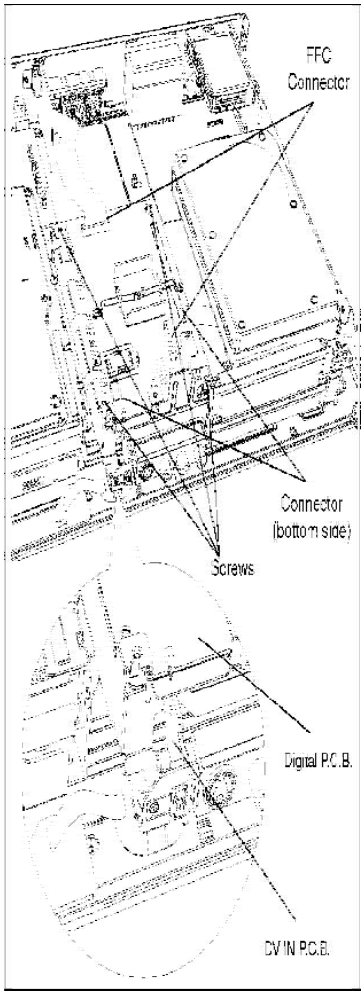

4. Put Digital P.C.B. on DVD-RAM Drive and remove RAM/Digital P.C.B. Module.

Note:
RAM/Digital P.C.B. Module as service part has no heat sink unit. Before returning to customer, heat sink unit should be installed on to Digital P.C.B.

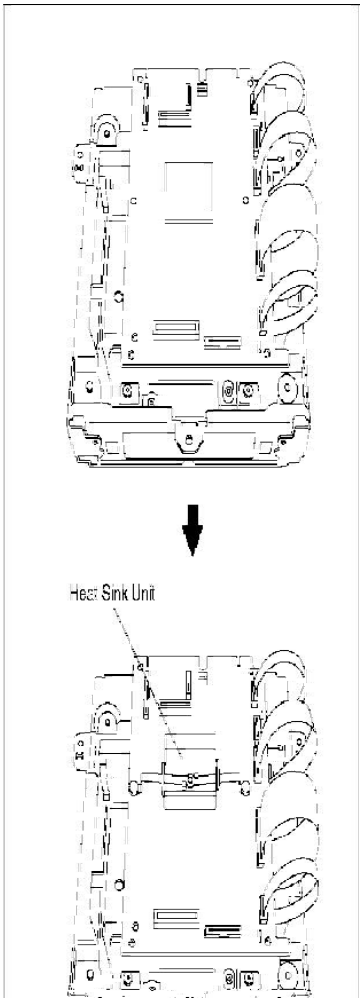

10.7. DV IN P.C.B.

1. Remove 1 Screw to remove DV IN P.C.B.

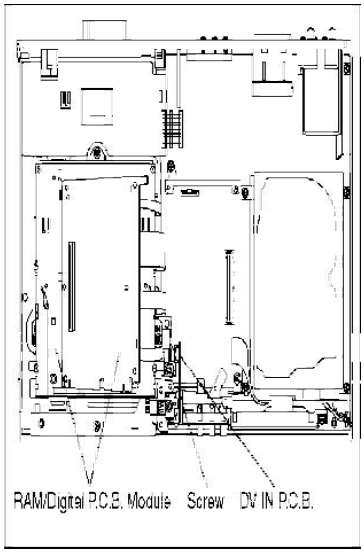

10.8. HARD DISC DRIVE

Caution:

Writing the main firmware to the unit is necessary after replacing the HDD. Prepare the latest firmware updating disc.

*** The main firmware is recorded in the HDD, but the replacement HDD has no data (and needs to be formatted).**

Writing Procedure of Main Firm:

- **Writing of Main Firm needs 3, 4 minutes.**
- **Never cut the power of DVD Recorder until writing in Firmware ends.**
- **Initial settings and contents of reservation will not change if writing is normally completed.**

1. Prepare latest firmware updating disc

2. Replace HDD

3. Turn on power of DVD Recorder

4. After [PLEASE WAIT] is displayed on FL., [HDD ERR] is displayed on FL

5. Tray opens automatically

6. Insert updating disc for Firmware and press OPEN / CLOSE key
(If a wrong disc was insered, [NG DISK] [NO FVU] is displayed on FL.)

7. [LOAD] [LD FVU] [M_FIRM] are displayed on FL alternately

8. [MAIN] [UPD OK] blink alternately and Tray opens. Take out disc
(Writing was finished)

9. Press Power button to turn off power

10. Press Power button to turn on power

11. [HELLO] → [SELF CHECK] are displayed on FL

12. [UNFORMATED] is displayed on FL

13. After [UNFORMAT] was displayed, message to request FORMAT is displayed on TV screen

14. Select [Yes] and press [ENTER] key to format HDD
(After FORMAT, program in HDD will be lost, but Main firm will not be lost
"Write of the main farm" is completed above

* Drive firm is not updated by above operation. If you wish update Drive firm, please prepare the disc for latest firmware update, and write again.
* If the version of the firm you have prepared was same as or later than has already been written in deck, "UNSUPPORT" is displayed on FL.
* In a usual updating of firmware, writing is not performed when the timer reservation standby was not released.

1. Remove ATAPI Connector and HDD Power Connector.

2. Remove 4 Screws (A) to remove HDD Angle with HDD.

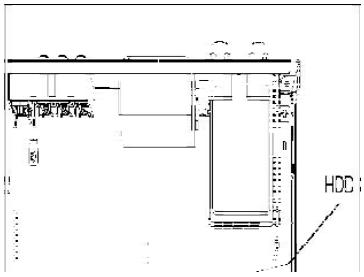

3. Put HDD with Angle up side down not to give a shock to HDD.

4. Remove 2 screws to remove HDD.

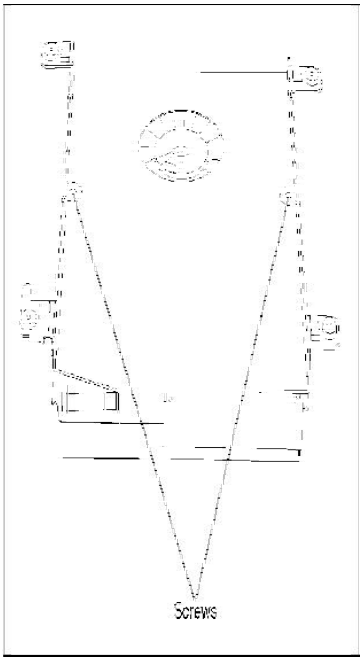

Handling of HDD

The following precautions should be taken when handling HDD.

1. **Never give an impact to HDD. (Even a drop from 1 cm height can be a cause of HDD failure).**
2. **When placing HDD on a workbench, provide a mat on a bench for shock absorption and anti-static purposes.**
3. **When installing HDD, release it from your hands only after confirming that it is fully set on the chassis.**
4. **Avoid stacking up HDD.**
5. **HDD is unstable and easy to fall. Do not stand it on its side face.**
6. **When handling HDD, hold its side faces to avoid static hazard.**
7. **Do not place HDD on its wrapping bag after removal. (Prevention of static hazard.)**
8. **Use a screwdriver with low impact and anti-static features.**

Note:

When replacing HDD, please make the rear jumper slave or cable select configuration.

10.9. POWER P.C.B.

1. **Remove the Screw (AC Inlet).**

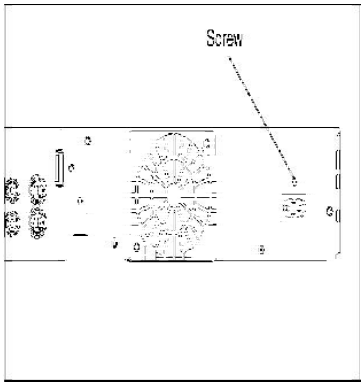

2. Remove 3 Screws and disconnect the 2 Connectors.
3. Lift up Power P.C.B. a little upwards and remove the P.C.B. sideways out of the Guide Pins.

   Note:

   When inserting P.C.B. confirm correct positions of Guide Pins.

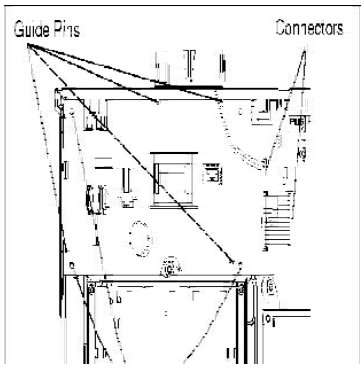

10.10. REAR PANEL

1. Disconnect Fan Connector.

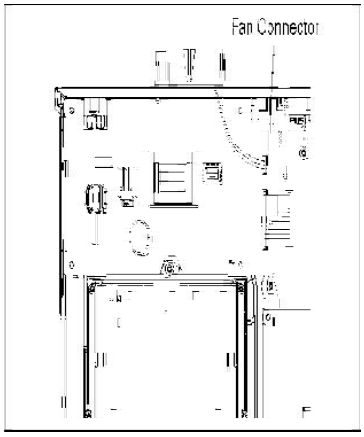

2. Remove 7 Screws (A) and 2 Screws (B).

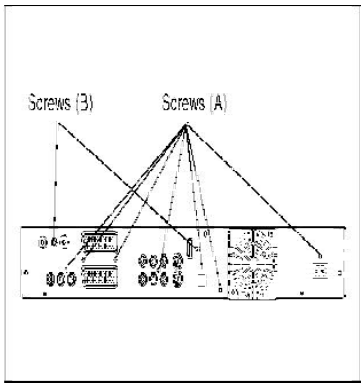

3. Unlock 2 Locking Tabs to remove Rear Panel.

10.10.1. FAN MOTOR

1. Disconnect Fan Connector.

2. Remove the 2 Screws.

3. Push and unlock 2 locking Tabs to remove Fan Motor.

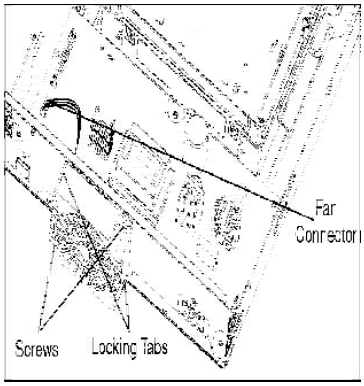

10.11. MAIN P.C.B. AND FRONT P.C.B.

1. **Remove 2 Screws from Main P.C.B. .**
2. **Remove 1 Screw from Front P.C.B. .**
3. **Pull out Main P.C.B. together with Front P.C.B. .**

   Note:

   When inserting P.C.B. confirm correct positions of Guide Pins.

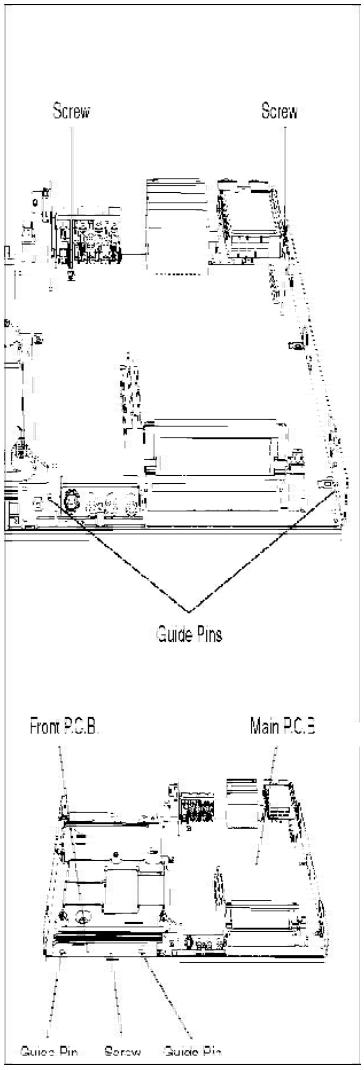

10.12. TUNER P.C.B. / AND TUNER

1. Pull out the Tuner P.C.B. in the direction of the arrow.

2. Remove Solder and pull out Tuner from Tuner P.C.B. .

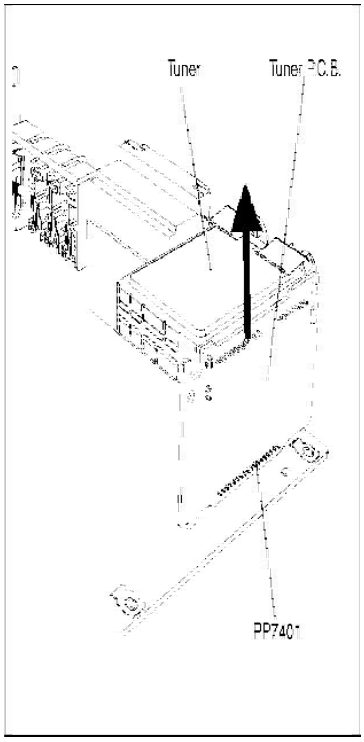

10.13. HDMI P.C.B.

1. Disconnect FFC Connector.

2. Pull out the HDMI P.C.B. in the direction of the arrow.

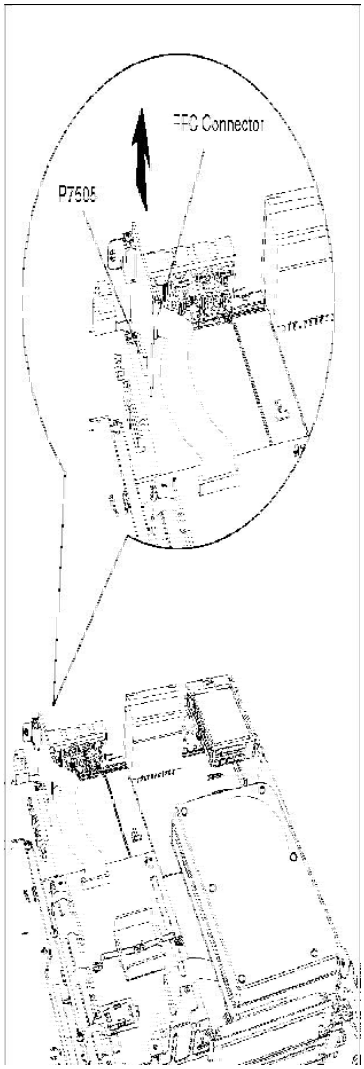

Caution:
When replacing HDMI P.C.B., pay attention as below.

11. MEASUREMENTS AND ADJUSTMENTS

11.1. SERVICE POSITIONS

Note:
For description of the disassembling procedure, see the section ASSEMBLING AND DISASSEMBLING (DISASSEMBLY FLOW CHART).

11.1.1. CHECKING AND REPAIRING OF POWER P.C.B.

1. Top Case

- **Remove 2 Screws (A) on side**
- **Remove 3 rear Screws (B) on rear**
- **Remove Top Case**

2. Power P.C.B.

- **Remove 1 Screw for AC Inlet fixing**
- **Remove 3 Screws fixing Power P.C.B.**
- **Remove 1 Connector to Main P.C.B.**
- **Remove 1 Connector to Fan P.C.B.**
- **Lift up Power P.C.B. sideways out of the Guide Pins.**
- **Connect Extension Cable:**
- **between Main P.C.B. and Power P.C.B. with RFKZ0216**
- **between Fan Motor and Power P.C.B. with RFKZ0168**
- **Put Power P.C.B. on Insulation Board so that it's solder side faces top**

Caution 1

Red wire in the extension cable should be connected to pin 1

Caution 2

Orginal screws should be used

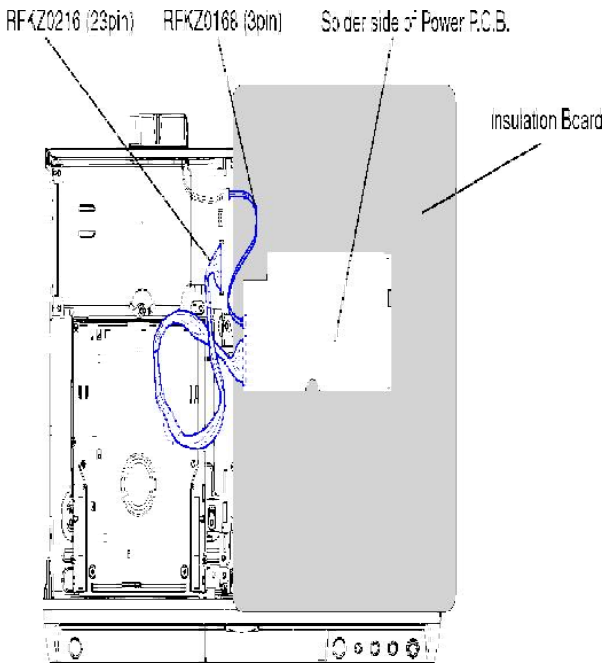

11.1.2. CHECKING AND REPAIRING OF MAIN P.C.B.

1. Top Case

- **Remove 2 Screws (A) on side and 3 rear Screws (B)**
- **Remove Top Case**

2. Front Panel

- **Unlock 2 Locking Tabs on the side and 3 Locking Tabs on bottom**
- **Remove Front Panel**

3. Rear Panel with Fan Motor

- **Remove 7 Screws (A) and 2 Screws (B)**
- **Unlock 2 Locking Tabs to remove Rear Panel**

4. Power P.C.B.

- **Remove 3 Screws fixing Power P.C.B.**
- **Unlock Connector to Main P.C.B.**
- **Remove Power P.C.B. together with Rear Panel**

5. Hard Disc Drive

- **Remove 4 Screws fixing Hard Disc Drive Angle**

6. Digital P.C.B. with SD Card P.C.B. and DV IN P.C.B.

- Remove 2 Screws fixing Digital P.C.B. Angle

7. Main P.C.B.

- Remove 2 Screws from Main P.C.B.

- Remove Screw from Front P.C.B.

- Unlock Main P.C.B. and Front P.C.B. from Bottom Plate

- Hold Hard Disc Drive and Digital P.C.B. carefully and put it together with Main P.C.B. up side down on the Insulation Board.

- Connect the Extension Cable:
- between Main P.C.B. and Power P.C.B. with RFKZ0216

Caution 1

Red wire in the extension cable should be connected to (1) pin.

Caution2

Orginal screws should be used.

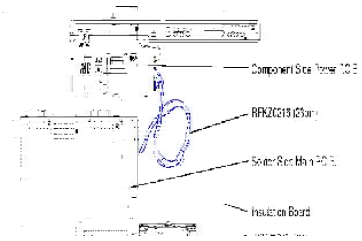

11.1.3. CHECKING AND REPLACING OF DVD-RAM DRIVE

1. Top Case

- Remove 2 Screws (A) on side and 3 rear Screws (B)

- Remove Top Case

2. Front Panel

- Unlock 2 Locking Tabs on side and 3 Locking Tabs on bottom

- Remove Front Panel

3. SD Card P.C.B.

- Remove 2 Screws

- Lift up SD Card P.C.B. and wrap it with insulation sheet.

4. HDD

- Remove 4 Screws fixing HDD Angle to remove it with HDD

- Disconnect FFC from HDD

5. RAM/Digital P.C.B. Module

- Remove 4 Screws fixing DVD-RAM Drive

- Disconnect FFC from HDMI P.C.B.

- Lift up Digital P.C.B. slightly to disconnect Main P.C.B. Connector and DV IN P.C.B. Connector on the bottom side.

- Take DV IN P.C.B. out of the Main P.C.B. and attach it to the Digital P.C.B.

- Put RAM/Digital P.C.B. Module on the side.

Connect Extension Cable:

- between Main P.C.B. and DVD-RAM Drive with RFKZ0260
- between Hard Disc Drive and Digital P.C.B. with FFC Extension Cable RFKZ0366
- between HDMI P.C.B. and Digital P.C.B. with FFC Extension Cable RFKZ0366

Caution

Orginal screws should be used.

11.1.4. CHECKING AND REPLACING OF HARD DISC DRIVE

1. Top Case

- Remove 2 Screws (A) on side

- Remove 3 rear Screws (B) on rear

- Remove Top Case

2. Hard Disc Drive

- Remove 4 Screws of HDD Angle from Main P.C.B.

- Remove HDD ATAPI Connector

- Remove Power Cable from HDD

- Remove 2 Screws from HDD to disconnect HDD Angle

- Put Replacement HDD on Insulation Board

- Connect Extension Cable:
- between Main P.C.B. and HDD with RFKZ0339
- between Digital P.C.B. and HDD with FFC Extension Cable RFKZ0366

Caution

Orginal screws should be used.

Caution for Removing Hard Disc Drive

Put HDD with HDD Angel up side down and remove the screws without giving a shock to HDD.

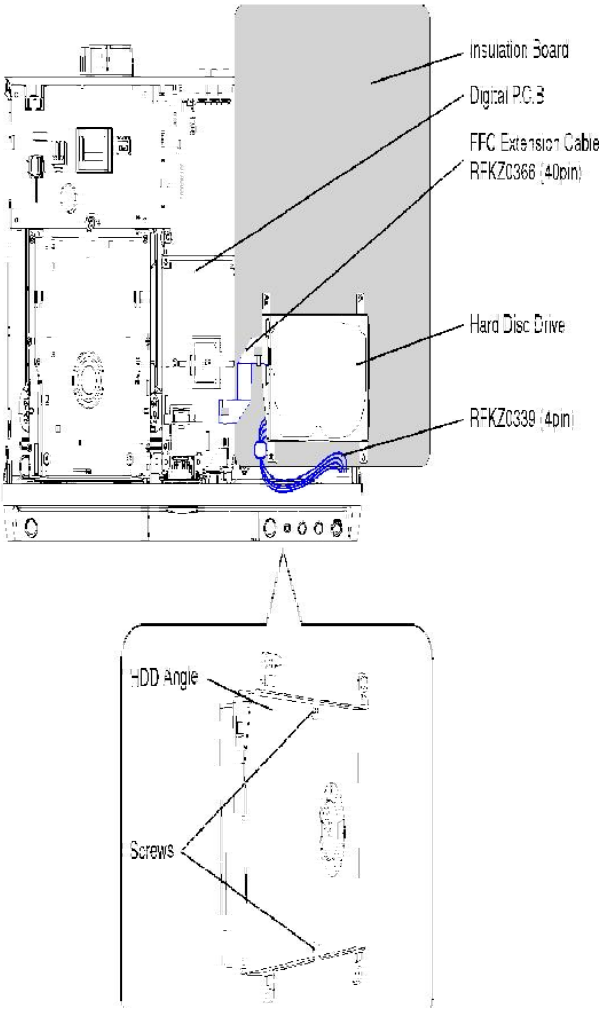

11.2. CAUTION FOR REPLACING PARTS

11.2.1. ITEMS THAT SHOULD BE DONE AFTER REPLACING PARTS

*** Note 1: (Resetting Method)**

Resetting object	Condition of power	Short Terminal
IC7501 (Timer IC)	POWER ON	IC7502-4 (Reset_L) and (GND)

*** Note 2:**

Please will always pass the customer "Warning for Customers Who Use the DivX Video-on-Demand content." with the product and get it when

you unavoidably exchange EEPROM or P.C.B. including EEPROM (When the product is exchanged, it is the same.).
You must use print attached to service part (EEPROM or P.C.B. including EEPROM) or must use copy of print below as “Warning for Customers who use the DivX Video-on-Demand content.”Information needed without fail for the customer for whom it is used continuing DivX Video-on-Demand Service to “Manual for the customer” is recorded.
Appendix:* Parts that memorize user’s information are only EEPROM.*
The registration of Registration Code is possible for half a year up to 6 recorders up to 10 recorders a year. Replacement of EEPROM or P.C.B. including EEPROM spends one of this.
Registration Code is memorized in EEPROM (RFKxxxxxx). / Model without VHS: on Main P.C.B.Model with VHS: on Digital I/F P.C.B. (Power & DVD I/F/P.C.B.)If exchange above P.C.B. or EEPROM, new registration Code differ from previous Registration Code will be generated.In this case if your customer uses DivX Video-on-Demand service, he/she will no longer be able to play any content that he/she purchased under that same registration code.Therefore your customer will need to obtain and register the new registration code.

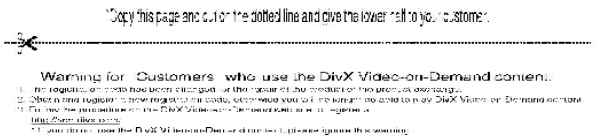
Copy this page and cut on the dotted line and give the lower half to your customer.

Warning for Customers who use the DivX Video-on-Demand content.

*** Note 3:**

Please prepare latest firmware updating disc.
***Main Firm is being recorded in HDD, but new HDD has no data.**
CAUTION:

- **Writing of Main Firm needs 3, 4 minutes.**
- **Never cut the power of DVD Recorder until writing in Firmware ends.**
- **Initial settings and contents of reservation will not change if writing is normally completed.**

Writing Procedure of Main Film:

1. **Prepare updating disc for firm ware**
2. **Replace HDD**
3. **Turn on power of DVD Recorder**
4. **After [PLEASE WAIT] is displayed on FL., [HDD ERR] is displayed on FL**

5. Tray opens automatically
6. Insert updating disc for Firmware and press OPEN / CLOSE key
   (If a wrong disc was insered, [NG DISK] [NO FVU] is displayed on FL.)
7. [LOAD] → [LD FVU] ←→ [M_FIRM] are displayed on FL alternately
8. [MAIN] ←→ [UPD OK] blink alternately and Tray opens. Take out disc
   (Writing was finished)
9. Press Power button to turn off power
10. Press Power button to turn on power
11. [HELLO] → [SELF CHECK] are displayed on FL
12. [UNFORMATED] is displayed on FL
13. After [UNFORMAT] was displayed, message to request FORMAT is displayed on TV screen
14. Select [Yes] and press [ENTER] key to format HDD
    (After FORMAT, program in HDD will be lost, but Main firm will not be lost
    "Write of the main farm" is completed above

* Drive firm is not updated by above operation. If you wish update Drive firm, please prepare the disc for latest firmware update, and write again.
* If the version of the firm you have prepared was same as or later than has already been written in deck, "UNSUPPORT" is displayed on FL.
* In a usual updating of firmware, writing is not performed when the timer reservation standby was not released.

11.2.2. NOTICE AFTER REPLACING RAM/DIGITAL P.C.B. MODULE

After replacing RAM/Digital P.C.B. Module, "TM AV1" is displayed on FL. Once power off, and start-up again.

11.3. STANDARD INSPECTION SPECIFICATIONS AFTER MAKING REPAIRS

After making repairs, we recommend performing the following inspection, to check normal operation.

No.	Procedure	Item to Check
1	Turn on the power, and confirm items pointed out.	Items pointed out should reappear.
2	Insert RAM disc.	The Panasonic RAM disc should be recognized.
3	Enter the EE (TU IN / AV IN - AV OUT) mode.	No abnormality should be seen in the picture, sound or operation.
4	Perform auto recording and playback for one minute using the RAM disc.	No abnormality should be seen in the picture, sound or operation. *Panasonic DVD-RAM disc should be used when recording and playback.
5	Model with the HDD: Perform auto recording and playback for one minute using the HDD.	No abnormality should be seen in the picture, sound or operation.
6	If a problem is caused by a VCD, DVD-R, DVD-Video, Audio-CD, or MP3, playback the test disc.	No abnormality should be seen in the picture, sound or operation.
7	Models with SD Card Slot or DV Input Jack: In case of that the trouble is caused by SD card and/ or DV terminal.	Models with SD Card Slot or DV Input Jack; 1) SD card: Check to be able to display and copy the picture. 2) DV terminal: Check to be able to record from DVC.
8	After checking and making repairs, upgrade the firmware to the latest version.	Make sure that [UPD OK] appears in the FL displays. *[UNSUPPORT] display means the unit is already updated to newest same version. Then version u is not necessary.
9	Transfer [9][9] in the service mode setting, and initialize the service settings (return various settings and error information to their default values. The laser time is not included in this initialization).	Make sure that [CLR] appears in the FL display. After checking it, turn the power off.
10	When replacing of RAM drive, transfer [9] [5] in the service mode setting to delete Laser used time.	Make sure that [CLR] appears in the FL display. After that, turn power off.

Use the following checklist to establish the judgement criteria for the picture and sound.

Item	Contents	Check	Item	Contents	Chec
Picture	Block noise		Sound	Distorted sound	
	Crosscut noise			Noise (static, background noise, etc.)	
	Dot noise			The sound level is too low.	
	Picture disruption			The sound level is too high.	
	Not bright enough			The sound level changes.	
	Too bright				
	Flickering color				
	Color fading				

11.4. ABBREVIATIONS

INITIAL/LOGO		ABBREVIATIONS
A	A0~UP	ADDRESS
	ACLK	AUDIO CLOCK
	AD0~UP	ADDRESS BUS
	ADATA	AUDIO PES PACKET DATA
	ALE	ADDRESS LATCH ENABLE
	AMUTE	AUDIO MUTE
	AREQ	AUDIO PES PACKET REQUEST
	ARF	AUDIO RF
	ASI	SERVO AMP INVERTED INPUT
	ASO	SERVO AMP OUTPUT
	ASYNC	AUDIO WORD DISTINCTION SYNC
B	BCK	BIT CLOCK (PCM)
	BCKIN	BIT CLOCK INPUT
	BDO	BLACK DROP OUT
	BLKCK	SUB CODE BLOCK CLOCK
	BOTTOM	CAP. FOR BOTTOM HOLD
	BYP	BYPATH
	BYTCK	BYTE CLOCK
C	CAV	CONSTANT ANGULAR VELOCITY
	CBDO	CAP. BLACK DROP OUT
	CD	COMPACT DISC
	CDSCK	CD SERIAL DATA CLOCK
	CDSRDATA	CD SERIAL DATA
	CDRF	CD RF (EFM) SIGNAL
	CDV	COMPACT DISC-VIDEO
	CHNDATA	CHANNEL DATA
	CKSL	SYSTEM CLOCK SELECT
	CLV	CONSTANT LINEAR VELOCITY
	COFTR	CAP. OFF TRACK
	CPA	CPU ADDRESS
	CPCS	CPU CHIP SELECT
	CPDT	CPU DATA
	CPUADR	CPU ADDRESS LATCH
	CPUADT	CPU ADDRESS DATA BUS
	CPUIRQ	CPU INTERRUPT REQUEST
	CPRD	CPU READ ENABLE
	CPWR	CPU WRITE ENABLE
	CS	CHIP SELECT
	CSYNCIN	COMPOSITE SYNC IN
	CSYNCOUT	COMPOSITE SYNC OUT

INITIAL/LOGO		ABBREVIATIONS
D	DACCK	D/A CONVERTER CLOCK
	DEEMP	DEEMPHASIS BIT ON/OFF
	DEMPH	DEEMPHASIS SWITCHING
	DIG0~UP	FL DIGIT OUTPUT
	DIN	DATA INPUT
	DMSRCK	DM SERIAL DATA READ CLOCK
	DMUTE	DIGITAL MUTE CONTROL
	DO	DROP OUT
	DOUT0~UP	DATA OUTPUT
	DRF	DATA SLICE RF (BIAS)
	DRPOUT	DROP OUT SIGNAL
	DREQ	DATA REQUEST
	DRESP	DATA RESPONSE
	DSC	DIGITAL SERVO CONTROLLER
	DSLF	DATA SLICE LOOP FILTER
	DVD	DIGITAL VIDEO DISC
E	EC	ERROR TORQUE CONTROL
	ECR	ERROR TORQUE CONTROL REFERENCE
	ENCSEL	ENCODER SELECT
	ETMCLK	EXTERNAL M CLOCK (81MHz/40.5MHz)
	ETSCLK	EXTERNAL S CLOCK (54MHz)
F	FBAL	FOCUS BALANCE
	FCLK	FRAME CLOCK
	FE	FOCUS ERROR
	FFI	FOCUS ERROR AMP INVERTED INPUT
	FEO	FOCUS ERROR AMP OUTPUT
	FG	FREQUENCY GENERATOR
	FSC	FREQUENCY SUB CARRIER
	FSCK	FS (384 OVER SAMPLING) CLOCK
G	GND	COMMON GROUNDING (EARTH)
H	HA0~UP	HOST ADDRESS
	HD0~UP	HOST DATA
	HINT	HOST INTERRUPT
	HRXW	HOST READ/WRITE
I	IECOUT	IEC958 FORMAT DATA OUTPUT
	IPFRAG	INTERPOLATION FLAG
	IREF	I (CURRENT) REFERENCE
	ISEL	INTERFACE MODE SELECT

INITIAL/LOGO		ABBREVIATIONS
L	LDON	LASER DIODE CONTROL
	LPC	LASER POWER CONTROL
	LRCK	L CH/R CH DISTINCTION CLOCK
M	MA0~UP	MEMORY ADDRESS
	MCK	MEMORY CLOCK
	MCKI	MEMORY CLOCK INPUT
	MCLK	MEMORY SERIAL COMMAND CLOCK
	MDATA	MEMORY SERIAL COMMAND DATA
	MDQ0~UP	MEMORY DATA INPUT/OUTPUT
	MDQM	MEMORY DATA I/O MASK
	MLD	MEMORY SERIAL COMMAND LOAD
	MPEG	MOVING PICTURE EXPERTS GROUP
O	ODC	OPTICAL DISC CONTROLLER
	OFTR	OFF TRACKING
	OSCI	OSCILLATOR INPUT
	OSCO	OSCILLATOR OUTPUT
	OSD	ON SCREEN DISPLAY
P	P1~UP	PORT
	PCD	CD TRACKING PHASE DIFFERENCE
	PCK	PLL CLOCK
	PDVD	DVD TRACKING PHASE DIFFERENCE
	PEAK	CAP. FOR PEAK HOLD
	PLLCLKPLLOK	CHANNEL PLL CLOCK
	PWMCTL	PLL LOCK
	PWMDA	PWM OUTPUT CONTROL
	PWMOA, B	PULSE WAVE MOTOR DRIVE A PULSE WAVE MOTOR OUT A, B
R	RE	READ ENABLE
	RFENV	RF ENVELOPE
	RFO	RF PHASE DIFFERENCE OUTPUT
	RS	(CD-ROM) REGISTER SELECT
	RSEL	RF POLARITY SELECT
	RST	RESET
	RSV	RESERVE

INITIAL/LOGO		ABBREVIATIONS
S	SBI0, 1	SERIAL DATA INPUT
	SBO0	SERIAL DATA OUTPUT
	SBT0, 1	SERIAL CLOCK
	SCK	SERIAL DATA CLOCK
	SCKR	AUDIO SERIAL CLOCK RECEIVER
	SCL	SERIAL CLOCK
	SCLK	SERIAL CLOCK
	SDA	SERIAL DATA
	SEG0~UP	FL SEGMENT OUTPUT
	SELCLK	SELECT CLOCK
	SEN	SERIAL PORT ENABLE
	SIN1, 2	SERIAL DATA IN
	SOUT1, 2	SERIAL DATA OUT
	SPDI	SERIAL PORT DATA INPUT
	SPDO	SERIAL PORT DATA OUTPUT
	SPEN	SERIAL PORT R/W ENABLE
	SPRCLK	SERIAL PORT READ CLOCK
	SPWCLK	SERIAL PORT WRITE CLOCK
	SQCK	SUB CODE Q CLOCK
	SQCX	SUB CODE Q DATA READ CLOCK
	SRDATA	SERIAL DATA
	SRMADR	SRAM ADDRESS BUS
	SRMDT0~7	SRAM DATA BUS 0~7
	SS	START/STOP
	STAT	STATUS
	STCLK	STREAM DATA CLOCK
	STD0~UP	STREAM DATA
	STENABLE	STREAM DATA INPUT ENABLE
	STSEL	STREAM DATA POLARITY SELECT
	STVALID	STREAM DATA VALIDITY
	SUBC	SUB CODE SERIAL
	SBCK	SUB CODE CLOCK
	SUBQ	SUB CODE Q DATA
	SYSCLK	SYSTEM CLOCK

INITIAL/LOGO		ABBREVIATIONS
T	TE	TRACKING ERROR
	TIBAL	BALANCE CONTROL
	TID	BALANCE OUTPUT 1
	TIN	BALANCE INPUT
	TIP	BALANCE INPUT
	TIS	BALANCE OUTPUT 2
	TPSN	OP AMP INPUT
	TPSO	OP AMP OUTPUT
	TPSP	OP AMP INVERTED INPUT
	TRCRS	TRACK CROSS SIGNAL
	TRON	TRACKING ON
	TRSON	TRAVERSE SERVO ON
V	VBLANK	V BLANKING
	VCC	COLLECTOR POWER SUPPLY VOLTAGE
	VCDCONT	VIDEO CD CONTROL (TRACKING BALANCE)
	VDD	DRAIN POWER SUPPLY VOLTAGE
	VFB	VIDEO FEED BACK
	VREF	VOLTAGE REFERENCE
	VSS	SOURCE POWER SUPPLY VOLTAGE
W	WAIT	BUS CYCLE WAIT
	WDCK	WORD CLOCK
	WEH	WRITE ENABLE HIGH
	WSR	WORD SELECT RECEIVER

INITIAL/LOGO		ABBREVIATIONS
X	X	X' TAL
	XALE	X ADDRESS LATCH ENABLE
	XAREQ	X AUDIO DATA REQUEST
	XCDROM	X CD ROM CHIP SELECT
	XCS	X CHIP SELECT
	XCSYNC	X COMPOSITE SYNC
	XDS	X DATA STROBE
	XHSYNCO	X HORIZONTAL SYNC OUTPUT
	XHINT	XH INTERRUPT REQUEST
	XI	X' TAL OSCILLATOR INPUT
	XINT	X INTERRUPT
	XMW	X MEMORY WRITE ENABLE
	XO	X' TAL OSCILLATOR OUTPUT
	XRE	X READ ENABLE
	XSRMCE	X SRAM CHIP ENABLE
	XSRMOE	X SRAM OUTPUT ENABLE
	XSRMWE	X SRAM WRITE ENABLE
	XVCS	X V-DEC CHIP SELECT
	XVDS	X V-DEC CONTROL BUS STROBE
	XVSYNCO	X VERTICAL SYNC OUTPUT

12. BLOCK DIAGRAM

12.1. POWER BLOCK DIAGRAM

12.2. ANALOG VIDEO BLOCK DIAGRAM

12.3. ANALOG AUDIO BLOCK DIAGRAM

12.4. TIMER BLOCK DIAGRAM

12.5. HDMI BLOCK DIAGRAM

13. SCHEMATIC DIAGRAM

13.1. INTERCONNECTION DIAGRAM

13.2. POWER

13.3. MAIN NET

13.4. MAIN AV IO

13.5. MAIN TIMER

13.6. MAIN NICAM

13.7. TUNER

13.8. SD CARD / FRONT / DV IN

13.9. HDMI

14. PRINTED CIRCUIT BOARD

14.1. POWER P.C.B.

14.2. MAIN P.C.B.

14.3. TUNER P.C.B. / DV IN P.C.B.

14.4. SD CARD P.C.B. / FRONT P.C.B.

14.5. HDMI P.C.B.

15. APPENDIX FOR SCHEMATIC DIAGRAM

15.1. VOLTAGE AND WAVEFORM CHART

Note:
Circuit voltage and waveform described, shall be regarded as reference information when probing defect point, because it may differ from an actual measuring value due to difference of Measuring instrument and its measuring condition and product itself.

15.1.1. VOLTAGE CHART

15.1.1.1. POWER P.C.B.

15.1.1.2. MAIN P.C.B. - PART 1

15.1.1.3. MAIN P.C.B. - PART 2

15.1.1.4. MAIN P.C.B. - PART 3

15.1.1.5. TUNER P.C.B.

15.1.1.6. P59001 CONNECTOR

15.1.2. WAVEFORM CHART

16. EXPLODED VIEWS

16.1. CASING PARTS AND & MECHANISM SECTION

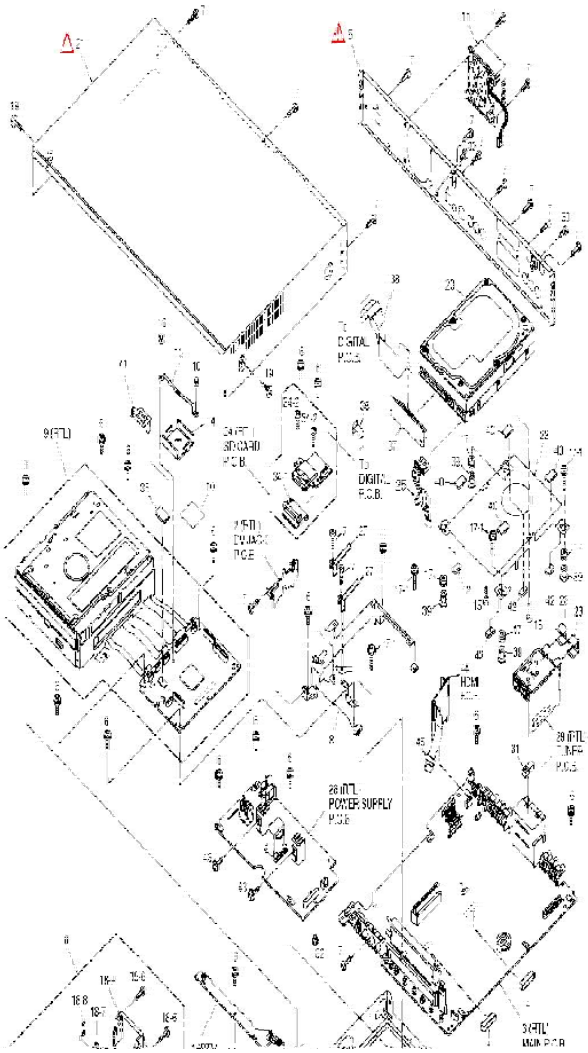

16.2. PACKING & ACCESSORIES SECTION

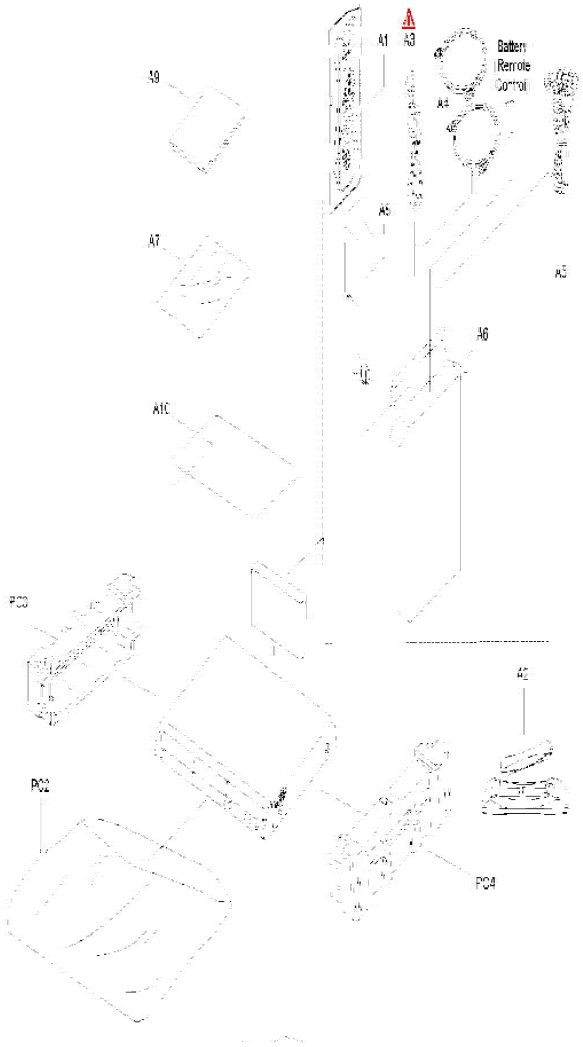

17. REPLACEMENT PARTS LIST

Notes:

***Important safety notice:**

Components identified by mark have special characteristics important for safety.
Furthermore, special parts which have purposes of fire-retardant (resistors), high-quality sound (capacitors), low-noise (resistors), etc. are used.
When replacing any of components, be sure to use only manufactures specified parts shown in the parts list.

***Warning: This product uses a laser diode. Refer to caution statements.**
***Capacity values are in microfarads (μ F) unless specified otherwise, P=Pico-farads (pF), F=Farads (F).**
***Resistance values are in ohms, unless specified otherwise, 1K=1,000 (OHM), 1M=1,000k (OHM).**
***The marking (RTL) indicates the retention time is limited for this item. After the discontinuation of this assembly in production, it will no longer be available.**
***All parts except parts mentioned [SPC] in the Remarks column are supplied from PAVCG.**
***Parts mentioned [SPC] are supplied from PAVC**
***The 1, 2, 3 in the Remarks column shows the models as follows:**
1 = DMR-EH65EP-S
2 = DMR-EH65EC-K
3 = DMR-EH65EC-S
No indication = all models

17.1. CASING PARTS & PRINTED CIRCUIT BOARDS

Ref. No.	Part No.	Part Name & Description	Pcs	Remarks
■ 1	VEP70161A	FRONT PCB	1	1,2,3 (RTL)
■ 2	VEP73135A	DV IN PCB	1	1,2,3 (RTL)
■ 3	RFKB79119LT	MAIN PCB	1	2,3 (RTL)
■ 3	RFKB79119MT	MAIN PCB	1	1 (RTL)
4	RMX0364	SPACER	2	1,2,3
5	RGR0365C-C	REAR PANEL	1	2,3
5	RGR0365C-M	REAR PANEL	1	1
6	RHD30111-3	SCREW	16	1,2,3
7	RHD30119-L	SCREW	16	1,2,3
8	RMA1979A	DIGITAL PCB ANGLE	1	1,2,3
■ 9	RFKNEH65EC	RAM DIGITAL PCB MODULE	1	2,3 (RTL)
■ 9	RFKNEH65EP	RAM DIGITAL PCB MODULE	1	1 (RTL)
10	RMQ1513	HEAT TRANSFER SHEET	1	1,2,3
11	L6FAJDAE0001	FAN MOTOR	1	1,2,3
12	RKA0144-K	FOOT RUBBER	4	1,2,3
13	RMC0672	PLATE SPRING	1	1,2,3
14	RMY0357	HEAT SINK	1	1,2,3
15	RHD32001	SCREW WITH WASHER	2	1,2,3
16	VKC0295	MINI CARD SPACER	2	1,2,3
17	RMG0704-W	DAMPER	4	1,2,3
17-1	RHD30149	SCREW	4	1,2,3
18	RYP1324-S	FRONT PANEL	1	3
18	RYP1324-K	FRONT PANEL	1	2
18	RYP1324E-S	FRONT PANEL	1	1
18-1	RGK1968A-Q	FL ORNAMENT	1	1,2,3
18-2	RGK1971-S	REC BUTTON RING	1	1,2,3
18-3	RKF0798K-S	PANEL DOOR UNIT	1	1,3
18-3	RKF0798L-K	PANEL DOOR UNIT	1	2
18-4	RKF0751C-K	TRAY DOOR	1	1,2,3
18-5	VMB3410	BLINDER SPRING	1	1,2,3
18-6	RHD26045	SCREW (PANEL)	2	1,2,3
18-7	RKF0754-K	SD BLINDER	1	1,2,3
18-8	RMB0841-1	SD LID SPRING	1	1,2,3
18-9	RMR1767-K	SD CHASSIS	1	1,2,3

Ref. No.	Part No.	Part Name & Description	Pcs	Remarks
19	RHD30113	SCREW TOP CASE SIDE	2	1,3
19	RHD30113-1K	SCREW TOP CASE SIDE	2	2
20	RFKV0071HDK	HDD ASSEMBLY	1	1,2,3
21	RKM0552A-S	TOP PANEL	1	1,3
21	RKM0552A-K	TOP PANEL	1	2
22	RMN0857	HDD BRACKET	1	1,2,3
23	RMC0625	TUNER GND	2	1,2,3
25	VEK0J99	MAIN-HDD CABLE	1	1,2,3
27	VMC1534	EARTH SPRING	2	1,2,3
■ 28	VEP71110A	POWER PCB	1	1,2,3 (RTL)
■ 29	VEP07A91B	TUNER PCB UNIT	1	2,3 (RTL)
■ 29	VEP07A91D	TUNER PCB UNIT	1	1 (RTL)
30	XSN3+4FJ	SCREW (TUNER)	2	1,2,3
31	RMQ1551	GASKET A	1	1,2,3
32	VMX1336	MINI CARD SPACER	1	1,2,3
33	RQLS0375	CAUTION LABEL	1	1,2,3
■ 34	VEP73136A	SD CARD PCB UNIT	1	1,2,3 (RTL)
34-1	RMR1766-K	SD CARD HOLDER	1	1,2,3
34-2	XTN2+8GFJ	SCREW	2	1,2,3
35	RMQ1514	HEAT TRANSF. SHEET D	1	1,2,3
36	VEK0K01	DIGITAL-SD FFC U	1	1,2,3
37	N5EZZ0000003	ATAPI CONNECTOR	1	1,2,3
38	VEK0K15	DIGITAL-HDD FFC	1	1,2,3
39	RMX0358	SLEEVE	4	1,2,3
40	RMX0359	HDD CUSHION SPACER	4	1,2,3
41	RMV0312	SHEET COVER	1	1,2,3
42	RMX0362	GEL SPACER	4	1,2,3
43	XYN3+J8FJ	SCREW	2	1,2,3
■ 44	VEP73137AB	HDMI PCB	1	1,2,3 (RTL)
45	VEK0K02	DIGITAL-HDMI FFC	1	1,2,3

17.2. PACKING & ACCESSORIES PARTS

Ref. No.	Part No.	Part Name & Description	Pcs	Remarks
A1	EUR7659Y60	REMOTE CONTROL	1	2,3
A1	EUR7659YC0	REMOTE CONTROL	1	1
A2	UR76EC5903	BATTERY COVER	1	1,2,3
A3	RJA0043-1C	POWERCORD	1	⚠1,2,3
A4	K1TWACC00001	RF CABLE	2	1,2,3
A5	K2KA6BA00003	AV CORD	1	1,2,3
A6	RPQFD0001	ACCESSORY BOX	1	1,2,3
A7	RPFD0005	PE-BAG	1	2,3
A7	RPFD0007	PE-BAG	1	1
A8	RPQD0003	PAD	1	1,2,3
A9	RQT8432-L	O/I BOOK (Eng Cont.)	1	2,3
A9	RQT8433-D	O/I BOOK (Ger)	1	2,3
A9	RQT8434-V	O/I BOOK (Ita)	1	2,3
A9	RQT8435-H	O/I BOOK (Dut)	1	2,3
A9	RQT8436-E	O/I BOOK (Fre)	1	2,3
A9	RQT8437-M	O/I BOOK (Spa)	1	2,3
A9	RQT8438-J	O/I BOOK (Swe, Dan)	1	2,3
A9	RQT8624-R	O/I BOOK (Rus)	1	1
A9	RQCC2704	DVD-MEDIA LEAFLET	1	1,2,3
A9	RQCB1293	REGISTRATION LEAFLET	1	1,2,3
A9	RQCA1539	RF LEAFLET	1	1,2,3
A9	RQCA1547	EPG SHEET	1	2,3
A10	RPN1903	F.B.K PAD	1	2,3
PC1	RPG7868	CARTON BOX	1	3
PC1	RPG8018	CARTON BOX	1	2
PC1	RPG7993	CARTON BOX	1	1
PC2	RPFD0004	MIRAMAT BAG	1	1,2,3
PC3	RPN1859A-2	CUSHION(LEFT)	1	1,2,3
PC4	RPN1859B-2	CUSHION(RIGHT)	1	1,2,3

17.3. ELECTRICAL PARTS

Ref. No.	Part No.	Part Name & Description	Pcs	Remarks
C1120	ECQU2A683MLC	X2 CAPACITOR	1	1,2,3
C1121	ECQU2A223MLC	EMI CAPACITOR	1	1,2,3
C1122	ECKWNA102MEV	CERAMIC CAPACITOR	1	1,2,3
C1123	ECKWNA102MEV	CERAMIC CAPACITOR	1	1,2,3
C1125	ECKWNA102MEV	CERAMIC CAPACITOR	1	1,2,3
C1143	F2B2W4700003	ALU ELEC CAPACITOR	1	1,2,3
C1150	F2A1V6800002	ALU ELEC CAPACITOR	1	1,2,3
C1151	F1B3D102A011	CERAMIC CAPACITOR	1	1,2,3
C1152	ECJ2VC1H331J	CHIP CAPACITOR	1	1,2,3
C1153	ECJGVB1H222K	CHIP CAPACITOR	1	1,2,3
C1154	ECJGVB1H102K	CHIP CAPACITOR	1	1,2,3
C1200	F1J1E104A081	CHIP CAPACITOR	1	1,2,3
C1201	ECJ2VB1E473K	CHIP CAPACITOR	1	1,2,3
C1270	F2A1C1820005	ALU ELEC CAPACITOR	1	1,2,3
C1271	F2A1C1820005	ALU ELEC CAPACITOR	1	1,2,3
C1272	F2A1C8210008	ALU ELEC CAPACITOR	1	1,2,3
C1503	F2A1A6810022	ALU ELEC CAPACITOR	1	1,2,3
C1504	F2A1E1010067	ALU ELEC CAPACITOR	1	1,2,3
C1508	ECJ1VB1A105K	CHIP CAPACITOR	1	1,2,3
C1509	F1H1H1030006	CHIP CAPACITOR	1	1,2,3
C1510	ECJ1VB1A105K	CHIP CAPACITOR	1	1,2,3

Ref. No.	Part No.	Part Name & Description	Pcs	Remarks
C1511	ECJ1VB1A105K	CHIP CAPACITOR	1	1,2,3
C1512	ECJ1VB1A105K	CHIP CAPACITOR	1	1,2,3
C1515	F2A1E4700048	ALU ELEC CAPACITOR	1	1,2,3
C1516	F2A1H1510006	ALU ELEC CAPACITOR	1	1,2,3
C1518	F2A0J6810007	ALU ELEC CAPACITOR	1	1,2,3
C1519	ECJ1VB1A105K	CHIP CAPACITOR	1	1,2,3
C1520	ECJ1VB1A105K	CHIP CAPACITOR	1	1,2,3
C1521	F2A1C121A453	ALU ELEC CAPACITOR	1	1,2,3
C1522	ECJ1VB1A105K	CHIP CAPACITOR	1	1,2,3
C1523	F2A1A470A388	ALU ELEC CAPACITOR	1	1,2,3
C1524	F2A1A101A389	ALU ELEC CAPACITOR	1	1,2,3
C1525	F1H1C104A042	CHIP CAPACITOR	1	1,2,3
C1526	ECJ1VB1A105K	CHIP CAPACITOR	1	1,2,3
C1527	ECJ1VB1A105K	CHIP CAPACITOR	1	1,2,3
C1528	ECJ3YB1C105K	CHIP CAPACITOR	1	1,2,3
C1529	F2A1A470A388	ALU ELEC CAPACITOR	1	1,2,3
C1535	ECJ1VB1A105K	CHIP CAPACITOR	1	1,2,3
C1536	F1J0J106A014	CHIP CAPACITOR	1	1,2,3
C1538	ECJ1VB1A105K	CHIP CAPACITOR	1	1,2,3
C1539	ECJ1VB1A105K	CHIP CAPACITOR	1	1,2,3
C1540	F1H1H1030006	CHIP CAPACITOR	1	1,2,3
C1541	F2A1E1010067	ALU ELEC CAPACITOR	1	1,2,3
C1548	F2A1C121A453	ALU ELEC CAPACITOR	1	1,2,3
C1549	F2A1C121A453	ALU ELEC CAPACITOR	1	1,2,3
C1601	F2A1E2210050	ALU ELEC CAPACITOR	1	1,2,3
C1602	F1J1E104A081	CHIP CAPACITOR	1	1,2,3
C1603	F1J1E104A081	CHIP CAPACITOR	1	1,2,3
C1604	ECJ2YB1C474K	CHIP CAPACITOR	1	1,2,3
C1605	ECJ2VC1H181J	CHIP CAPACITOR	1	1,2,3
C1606	ECJGVB1H103K	CHIP CAPACITOR	1	1,2,3
C1607	F2A1A6810022	ALU ELEC CAPACITOR	1	1,2,3
C1608	F1J1E104A081	CHIP CAPACITOR	1	1,2,3
C1701	F2A1E2210050	ALU ELEC CAPACITOR	1	1,2,3
C1702	F1H1C104A042	CHIP CAPACITOR	1	1,2,3
C1703	F1H1C104A042	CHIP CAPACITOR	1	1,2,3
C1704	F1H1C104A042	CHIP CAPACITOR	1	1,2,3
C1705	ECJ1VC1H181J	CHIP CAPACITOR	1	1,2,3
C1706	F1H1H1030006	CHIP CAPACITOR	1	1,2,3
C1707	F2A0J6810007	ALU ELEC CAPACITOR	1	1,2,3
C1800	F2A1E4700048	ALU ELEC CAPACITOR	1	1,2,3
C3001	F1H1C104A042	CHIP CAPACITOR	1	1,2,3
C3002	F1H1H1030006	CHIP CAPACITOR	1	1,2,3
C3003	F1H1C104A042	CHIP CAPACITOR	1	1,2,3
C3004	F1H1C104A042	CHIP CAPACITOR	1	1,2,3
C3005	F2A0J471A016	ALU ELEC CAPACITOR	1	1,2,3
C3006	F2A0J471A016	ALU ELEC CAPACITOR	1	1,2,3
C3007	F2A1A4710038	ALU ELEC CAPACITOR	1	1,2,3
C3008	F2A1A1010072	ALU ELEC CAPACITOR	1	1,2,3
C3009	F2A1A4710038	ALU ELEC CAPACITOR	1	1,2,3
C3010	F2A1A1010072	ALU ELEC CAPACITOR	1	1,2,3
C3011	F1H1C104A042	CHIP CAPACITOR	1	1,2,3
C3012	F2A1A4710038	ALU ELEC CAPACITOR	1	1,2,3
C3013	F2A1A1010072	ALU ELEC CAPACITOR	1	1,2,3
C3014	F1H1C104A042	CHIP CAPACITOR	1	1,2,3
C3015	F1H1C104A042	CHIP CAPACITOR	1	1,2,3
C3016	F1H1C104A042	CHIP CAPACITOR	1	1,2,3
C3017	F1H1C104A042	CHIP CAPACITOR	1	1,2,3

[illegible]	[illegible]	[illegible]	[illegible]	[illegible]

Ref. No.	Part No.	Part Name & Description	Pcs	Remarks
C3018	F1H1C104A042	CHIP CAPACITOR	1	1,2,3
C3019	F1H1C104A042	CHIP CAPACITOR	1	1,2,3
C3020	F1H1C104A042	CHIP CAPACITOR	1	1,2,3
C3021	F1H1C104A042	CHIP CAPACITOR	1	1,2,3
C3022	F1H1C104A042	CHIP CAPACITOR	1	1,2,3
C3024	F1H0J1050012	CHIP CAPACITOR	1	1,2,3
C3025	F1H1C104A042	CHIP CAPACITOR	1	1,2,3
C3026	F1H0J1050012	CHIP CAPACITOR	1	1,2,3
C3027	F1H1C104A042	CHIP CAPACITOR	1	1,2,3
C3028	F1H0J1050012	CHIP CAPACITOR	1	1,2,3
C3029	F1H1C104A042	CHIP CAPACITOR	1	1,2,3
C3031	F1H1H1030006	CHIP CAPACITOR	1	1,2,3
C3032	ECEA0JKA101B	ALU ELEC CAPACITOR	1	1,2,3
C3033	F1H1H1030006	CHIP CAPACITOR	1	1,2,3
C3034	F1H1H1030006	CHIP CAPACITOR	1	1,2,3
C3035	ECEA0JKA101B	ALU ELEC CAPACITOR	1	1,2,3
C3038	F1H1C104A042	CHIP CAPACITOR	1	1,2,3
C3039	F1H1C104A042	CHIP CAPACITOR	1	1,2,3
C3041	F1H1H330A736	CHIP CAPACITOR	1	1,2,3
C3057	F1H1H1020005	CHIP CAPACITOR	1	1,2,3
C3058	ECJ1VC1H471J	CHIP CAPACITOR	1	1,2,3
C3059	F1H1H1020005	CHIP CAPACITOR	1	1,2,3
C3060	ECJ1VC1H471J	CHIP CAPACITOR	1	1,2,3
C3064	F1H1C104A042	CHIP CAPACITOR	1	1,2,3
C3070	F1H1H1020005	CHIP CAPACITOR	1	1,2,3
C3071	F1H1H1020005	CHIP CAPACITOR	1	1,2,3
C3072	F1H1C104A042	CHIP CAPACITOR	1	1,2,3
C3910	F2A1V100A534	ALU ELEC CAPACITOR	1	1,2,3
C3911	F2A1V100A534	ALU ELEC CAPACITOR	1	1,2,3
C3914	F2A1H100A236	ALU ELEC CAPACITOR	1	1,2,3
C3915	F2A1H100A236	ALU ELEC CAPACITOR	1	1,2,3
C3916	F2A1H1R0A236	ALU ELEC CAPACITOR	1	1,2,3
C3917	F2A1H1R0A236	ALU ELEC CAPACITOR	1	1,2,3
C3918	F2A1H100A236	ALU ELEC CAPACITOR	1	1,2,3
C3919	F2A1H100A236	ALU ELEC CAPACITOR	1	1,2,3
C3928	F2A1H1R0A638	ALU ELEC CAPACITOR	1	1,2,3
C3929	F2A1H1R0A638	ALU ELEC CAPACITOR	1	1,2,3
C3935	F2A1E2210050	ALU ELEC CAPACITOR	1	1,2,3
C3953	ECJ1VC1H471J	CHIP CAPACITOR	1	1,2,3
C3954	ECJ1VC1H471J	CHIP CAPACITOR	1	1,2,3
C3955	ECJ1VC1H221J	CHIP CAPACITOR	1	1,2,3
C3956	ECJ1VC1H221J	CHIP CAPACITOR	1	1,2,3
C3957	ECJ1VC1H471J	CHIP CAPACITOR	1	1,2,3
C3958	ECJ1VC1H471J	CHIP CAPACITOR	1	1,2,3
C3961	ECJ1VC1H221J	CHIP CAPACITOR	1	1,2,3
C3962	ECJ1VC1H221J	CHIP CAPACITOR	1	1,2,3
C4003	F1H0J1050012	CHIP CAPACITOR	1	1,2,3
C4005	F2A1V100A534	ALU ELEC CAPACITOR	1	1,2,3
C4006	F2A1V100A534	ALU ELEC CAPACITOR	1	1,2,3
C4008	F2A1E1010067	ALU ELEC CAPACITOR	1	1,2,3
C4019	F2A1C100A796	ALU ELEC CAPACITOR	1	1,2,3
C4021	F2A1C100A796	ALU ELEC CAPACITOR	1	1,2,3
C4023	F2A1H1R0A638	ALU ELEC CAPACITOR	1	1,2,3
C4024	F2A1E1010067	ALU ELEC CAPACITOR	1	1,2,3
C4025	F2A1H1R0A638	ALU ELEC CAPACITOR	1	1,2,3
C4027	F2A1V100A534	ALU ELEC CAPACITOR	1	1,2,3
C4028	F2A1V100A534	ALU ELEC CAPACITOR	1	1,2,3

[illegible]	[illegible]	[illegible]	[illegible]	[illegible]

Ref. No.	Part No.	Part Name & Description	Pcs	Remarks
C4033	F2A1C220B173	ALU ELEC CAPACITOR	1	1,2,3
C4034	F2A1C220B173	ALU ELEC CAPACITOR	1	1,2,3
C4055	F1H1C104A008	CHIP CAPACITOR	1	1,2,3
C4056	F2A1C471A628	ALU ELEC CAPACITOR	1	1,2,3
C4057	ECJ2VC1H330J	CHIP CAPACITOR	1	1,2,3
C4059	ECQV1H104JL3	PLAST FILM CAPACITOR	1	1,2,3
C4060	ECJ2VC1H330J	CHIP CAPACITOR	1	1,2,3
C4061	F1H1C104A008	CHIP CAPACITOR	1	1,2,3
C4062	F2A1C221A637	ALU ELEC CAPACITOR	1	1,2,3
C4063	F2A1C220B173	ALU ELEC CAPACITOR	1	1,2,3
C4064	F2A1C220B173	ALU ELEC CAPACITOR	1	1,2,3
C4065	F1H1C104A008	CHIP CAPACITOR	1	1,2,3
C4067	F2A1E2210050	ALU ELEC CAPACITOR	1	1,2,3
C4070	F2A1C221A637	ALU ELEC CAPACITOR	1	1,2,3
C4072	F2A1C221A637	ALU ELEC CAPACITOR	1	1,2,3
C4082	ECJ2VC1H561J	CHIP CAPACITOR	1	1,2,3
C4083	ECJ2VC1H561J	CHIP CAPACITOR	1	1,2,3
C4092	F2A1C471A628	ALU ELEC CAPACITOR	1	1,2,3
C4901	F2A0J470A599	ALU ELEC CAPACITOR	1	1,2,3
C4902	F1H1C104A008	CHIP CAPACITOR	1	1,2,3
C4903	F2A1E4700048	ALU ELEC CAPACITOR	1	1,2,3
C4904	F1H1C104A008	CHIP CAPACITOR	1	1,2,3
C4907	ECHR1H223JZ3	FILM CAPACITOR	1	1,2,3
C56001	ECJ0EC1H221J	CHIP CAPACITOR	1	1,2,3
C56101	ECJ0EB1A104K	CHIP CAPACITOR	1	1,2,3
C56102	ECJ0EB1A104K	CHIP CAPACITOR	1	1,2,3
C56103	ECJ0EB1A104K	CHIP CAPACITOR	1	1,2,3
C56104	ECJ0EB1A104K	CHIP CAPACITOR	1	1,2,3
C56105	ECJ0EB1A104K	CHIP CAPACITOR	1	1,2,3
C56106	ECJ0EB1A104K	CHIP CAPACITOR	1	1,2,3
C56107	ECJ0EB1A104K	CHIP CAPACITOR	1	1,2,3
C56108	ECJ0EB1A104K	CHIP CAPACITOR	1	1,2,3
C56109	ECJ0EB1A104K	CHIP CAPACITOR	1	1,2,3
C56110	ECJ0EB1A104K	CHIP CAPACITOR	1	1,2,3
C56111	ECJ0EB1A104K	CHIP CAPACITOR	1	1,2,3
C56112	ECJ0EB1A104K	CHIP CAPACITOR	1	1,2,3
C56113	ECJ0EB1A104K	CHIP CAPACITOR	1	1,2,3
C56114	ECJ0EB1A104K	CHIP CAPACITOR	1	1,2,3
C56115	ECJ0EB1A104K	CHIP CAPACITOR	1	1,2,3
C56116	ECJ0EB1A104K	CHIP CAPACITOR	1	1,2,3
C56117	ECJ0EB1A104K	CHIP CAPACITOR	1	1,2,3
C56118	ECJ0EB1A104K	CHIP CAPACITOR	1	1,2,3
C56119	ECJ0EB1A104K	CHIP CAPACITOR	1	1,2,3
C56120	ECJ0EB1A104K	CHIP CAPACITOR	1	1,2,3
C56121	ECJ0EB1A104K	CHIP CAPACITOR	1	1,2,3
C56122	ECJ0EB1A104K	CHIP CAPACITOR	1	1,2,3
C56123	ECJ0EB1A104K	CHIP CAPACITOR	1	1,2,3
C56124	ECJ0EB1A104K	CHIP CAPACITOR	1	1,2,3
C56125	ECJ0EB1A104K	CHIP CAPACITOR	1	1,2,3
C56126	ECJ0EB1A104K	CHIP CAPACITOR	1	1,2,3
C56127	ECJ0EB1A104K	CHIP CAPACITOR	1	1,2,3
C56128	ECJ0EB1A104K	CHIP CAPACITOR	1	1,2,3
C56129	ECJ0EC1H221J	CHIP CAPACITOR	1	1,2,3
C56130	F1H0J1050012	CHIP CAPACITOR	1	1,2,3
C56131	F1J0J106A014	CHIP CAPACITOR	1	1,2,3
C56132	ECJ0EB1C103K	CHIP CAPACITOR	1	1,2,3
C56133	ECJ1VB1A105K	CHIP CAPACITOR	1	1,2,3

[illegible]	[illegible]	[illegible]	[illegible]	[illegible]

Ref. No.	Part No.	Part Name & Description	Pcs	Remarks
C56134	ECJ1VB1A105K	CHIP CAPACITOR	1	1,2,3
C56135	ECJ0EB1A104K	CHIP CAPACITOR	1	1,2,3
C56140	ECJ0EB1A104K	CHIP CAPACITOR	1	1,2,3
C6801	F1H1H1030006	CHIP CAPACITOR	1	1,2,3
C6802	F1H1A225A051	CHIP CAPACITOR	1	1,2,3
C7301	F1H1C104A042	CHIP CAPACITOR	1	1,2,3
C7303	ECA1CAK101XB	ALU ELEC CAPACITOR	1	1,2,3
C7305	ECA1CAK101XB	ALU ELEC CAPACITOR	1	1,2,3
C7306	F1H1H1030006	CHIP CAPACITOR	1	1,2,3
C7307	ECJ1VC1H100D	CHIP CAPACITOR	1	1,2,3
C7308	ECJ1VC1H100D	CHIP CAPACITOR	1	1,2,3
C7309	F1H1H1010005	CHIP CAPACITOR	1	1,2,3
C7310	F1H1H1010005	CHIP CAPACITOR	1	1,2,3
C7311	F1H1H1010005	CHIP CAPACITOR	1	2,3
C7312	F2A1V100A384	ALU ELEC CAPACITOR	1	1,2,3
C7313	F2A1V100A384	ALU ELEC CAPACITOR	1	1,2,3
C7314	F1H1C104A008	CHIP CAPACITOR	1	1,2,3
C7317	ECA1CAK470XB	ALU ELEC CAPACITOR	1	1,2,3
C7318	ECA1CAK100XB	ALU ELEC CAPACITOR	1	2,3
C7323	F1H1H1020005	CHIP CAPACITOR	1	1,2,3
C7324	F1H1C104A008	CHIP CAPACITOR	1	1,2,3
C7329	D0YBR0000020	CHIP RESISTOR	1	1,2,3
C7330	D0GB822JA057	CHIP RESISTOR	1	1,2,3
C7332	F1H1C104A008	CHIP CAPACITOR	1	1,2,3
C7333	F1H1C104A042	CHIP CAPACITOR	1	1,2,3
C7334	ECA1HAK2R2XB	ALU ELEC CAPACITOR	1	1,2,3
C7335	F1H1C104A008	CHIP CAPACITOR	1	1,2,3
C7340	F1H1C104A042	CHIP CAPACITOR	1	1,2,3
C7401	F2A1C471A628	ALU ELEC CAPACITOR	1	1,2,3
C7402	F1H1H1030006	CHIP CAPACITOR	1	1,2,3
C7403	ECHR1H223JZ3	FILM CAPACITOR	1	1,2,3
C7404	ECJ1VB1A105K	CHIP CAPACITOR	1	1,2,3
C7405	F2A1C470A689	ALU ELEC CAPACITOR	1	1,2,3
C7406	ECJ1VB1A105K	CHIP CAPACITOR	1	1,2,3
C7407	F1H1C104A042	CHIP CAPACITOR	1	1,2,3
C7412	ECJ1VB1A105K	CHIP CAPACITOR	1	1,2,3
C7413	ECJ1VB1A105K	CHIP CAPACITOR	1	1,2,3
C7414	ECJ1VB1A105K	CHIP CAPACITOR	1	1,2,3
C7415	ECJ3YB1C105K	CHIP CAPACITOR	1	1,2,3
C7417	F1H1C104A042	CHIP CAPACITOR	1	1,2,3
C7418	F2A0J221A458	ALU ELEC CAPACITOR	1	1,2,3
C7419	F1H0J1050012	CHIP CAPACITOR	1	1,2,3
C7439	F1H1C104A042	CHIP CAPACITOR	1	1,2,3
C7501	F1J0J475A008	CHIP CAPACITOR	1	1,2,3
C7502	F1H1H1010005	CHIP CAPACITOR	1	1,2,3
C7503	F1J0J475A008	CHIP CAPACITOR	1	1,2,3
C7504	F1H1C104A042	CHIP CAPACITOR	1	1,2,3
C7505	F1H1C104A042	CHIP CAPACITOR	1	1,2,3
C7507	F1H1C104A042	CHIP CAPACITOR	1	1,2,3
C7509	F1H1C104A042	CHIP CAPACITOR	1	1,2,3
C7510	F1H1C104A042	CHIP CAPACITOR	1	1,2,3
C7511	F1H1H1010005	CHIP CAPACITOR	1	1,2,3
C7512	F1H1C104A042	CHIP CAPACITOR	1	1,2,3
C7513	F2A1V390A386	ALU ELEC CAPACITOR	1	1,2,3
C7514	F1H1H1030006	CHIP CAPACITOR	1	1,2,3
C7516	ECJ1VC1H180J	CHIP CAPACITOR	1	1,2,3
C7517	ECJ1VC1H180J	CHIP CAPACITOR	1	1,2,3

[illegible]	[illegible]	[illegible]	[illegible]	[illegible]

Ref. No.	Part No.	Part Name & Description	Pcs	Remarks
C7518	ECJ1VC1H220J	CHIP CAPACITOR	1	1,2,3
C7519	ECJ1VC1H180J	CHIP CAPACITOR	1	1,2,3
C7520	F1H1C104A042	CHIP CAPACITOR	1	1,2,3
C7522	F1H1H1010005	CHIP CAPACITOR	1	1,2,3
C7523	F1H1H1030006	CHIP CAPACITOR	1	1,2,3
C7524	F1H1C104A042	CHIP CAPACITOR	1	1,2,3
C7528	F1H1C104A042	CHIP CAPACITOR	1	1,2,3
C7531	ECJ1VC1H100D	CHIP CAPACITOR	1	1,2,3
C7532	ECJ1VC1H100D	CHIP CAPACITOR	1	1,2,3
C7534	F1H1H1030006	CHIP CAPACITOR	1	1,2,3
C7541	F1H1H4700004	CHIP CAPACITOR	1	1,2,3
C7542	F1H1C104A042	CHIP CAPACITOR	1	1,2,3
C7543	F1H1H4700004	CHIP CAPACITOR	1	1,2,3
C7544	F1H1C104A042	CHIP CAPACITOR	1	1,2,3
C7546	F1H0J1050012	CHIP CAPACITOR	1	1,2,3
C7547	F1H0J1050012	CHIP CAPACITOR	1	1,2,3
C7551	F1H1C104A042	CHIP CAPACITOR	1	1,2,3
C7552	ECJ1VC1H221J	CHIP CAPACITOR	1	1,2,3
C7553	ECJ1VC1H221J	CHIP CAPACITOR	1	1,2,3
C7554	F1H1H1030006	CHIP CAPACITOR	1	1,2,3
C7555	F1H1H1030006	CHIP CAPACITOR	1	1,2,3
C7556	F1H1H1030006	CHIP CAPACITOR	1	1,2,3
C7557	F1H1H1030006	CHIP CAPACITOR	1	1,2,3
C7558	F1H1H1030006	CHIP CAPACITOR	1	1,2,3
C7565	F2A1C121A453	ALU ELEC CAPACITOR	1	1,2,3
C7569	ECQB1H392KF3	PLAST FILM CAPACITOR	1	1,2,3
C7570	F2A1V560A387	ALU ELEC CAPACITOR	1	1,2,3
C7571	F2A1H100A454	ALU ELEC CAPACITOR	1	1,2,3
C7572	F2A1C121A453	ALU ELEC CAPACITOR	1	1,2,3
C7573	F2A1H100A454	ALU ELEC CAPACITOR	1	1,2,3
C7577	F1H1C104A042	CHIP CAPACITOR	1	1,2,3
C7578	F2A0J470A012	ALU ELEC CAPACITOR	1	1,2,3
C7579	F2A0J470A012	ALU ELEC CAPACITOR	1	1,2,3
C7584	F4D55473A013	ALU ELEC CAPACITOR	1	1,2,3
C7587	F1H0J1050012	CHIP CAPACITOR	1	1,2,3
C7588	F1H1H1030006	CHIP CAPACITOR	1	1,2,3
C7590	F1H1C104A042	CHIP CAPACITOR	1	1,2,3
C7592	F2A0J470A245	ALU ELEC CAPACITOR	1	1,2,3
C7593	F2A1C121A453	ALU ELEC CAPACITOR	1	1,2,3
C7809	F1H1H1030006	CHIP CAPACITOR	1	1,2,3
C7813	F2A0J470A599	ALU ELEC CAPACITOR	1	1,2,3
C7814	F2A1H2200032	ALU ELEC CAPACITOR	1	1,2,3
C7817	F2A0J470A599	ALU ELEC CAPACITOR	1	1,2,3
C7818	F1H1H330A736	CHIP CAPACITOR	1	1,2,3
C7819	F1H1H330A736	CHIP CAPACITOR	1	1,2,3
C7820	F1H1C104A042	CHIP CAPACITOR	1	1,2,3
C7821	F1H1H1030006	CHIP CAPACITOR	1	1,2,3
C7822	F1H1H1030006	CHIP CAPACITOR	1	1,2,3
C7824	F2A0J470A599	ALU ELEC CAPACITOR	1	1,2,3
C7825	F1H1H1010005	CHIP CAPACITOR	1	1
C7828	F1H1H1030006	CHIP CAPACITOR	1	1,2,3
C7838	F2A1E4700048	ALU ELEC CAPACITOR	1	2,3
D1140	B0EDKT000009	DIODE	1	1,2,3
D1151	B0HAGM000006	DIODE	1	1,2,3
D1152	MAZ4100NMF	DIODE	1	1,2,3
D1155	MAZ73000BC	DIODE	1	1,2,3
D1156	MA2C165001VT	DIODE	1	1,2,3

Ref. No.	Part No.	Part Name & Description	Pcs	Remarks
D1157	B0HADV000001	DIODE	1	1,2,3
D1270	B0JBSG000010	DIODE	1	1,2,3
ZA1270	VSC5614	HEAT SINK	1	1,2,3
D1601	B0JCPD000021	DIODE	1	1,2,3
D1701	B0JCPD000021	DIODE	1	1,2,3
D1800	MA2J11100L	CHIP DIODE	1	1,2,3
D3901	MA2C165001VT	DIODE	1	1,2,3
D4001	MA2C165001VT	DIODE	1	1,2,3
D4005	MA3Z142D0LG	DIODE	1	1,2,3
D4006	MA3Z142D0LG	DIODE	1	1,2,3
D56101	MA2J72800L	DIODE	1	1,2,3
D7403	MA2C165001VT	DIODE	1	1,2,3
D7501	B0BA03600021	DIODE	1	1,2,3
D7502	B0ACCK000005	DIODE	1	1,2,3
D7504	MAZ4220NLF	DIODE	1	1,2,3
D7505	B0AADM000003	DIODE	1	1,2,3
D7506	B0AADM000003	DIODE	1	1,2,3
D7507	B0JAMD000026	DIODE	1	1,2,3
D7508	MAZ4180NHF	DIODE	1	1,2,3
D7509	B0JDCE000002	DIODE	1	1,2,3
D7510	MA2C165001VT	DIODE	1	1,2,3
D7802	B0BA03000015	DIODE	1	1,2,3
DP7501	A2BD00000145	FL DISPLAY	1	1,2,3
F1101	K5D202BK0005	FUSE	1	⚠1,2,3
FL6101	F1H0J1050025	CERAMIC CAPACITOR	1	1,2,3
FL6102	F1H0J1050025	CERAMIC CAPACITOR	1	1,2,3
FL6103	F1H0J1050025	CERAMIC CAPACITOR	1	1,2,3
FL6104	F1H0J1050025	CERAMIC CAPACITOR	1	1,2,3
FL6105	F1H0J1050025	CERAMIC CAPACITOR	1	1,2,3
FL6106	F1H0J1050025	CERAMIC CAPACITOR	1	1,2,3
FL6110	F1H0J1050025	CERAMIC CAPACITOR	1	1,2,3
FP6101	K1MN40AA0082	CONNECTOR	1	1,2,3
IC1150	C0DACZH00017	POWER SUPPLY IC	1	1,2,3
ZA1150	VSC5603	HEAT SINK	1	1,2,3
IC1200	C0DAEMB00003	POWER SUPPLY IC	1	1,2,3
IC1505	C0CBCBC00174	POWER SUPPLY IC	1	1,2,3
IC1506	C0DAEYH00002	POWER SUPPLY IC	1	1,2,3
IC1507	C0CBCDD00027	POWER SUPPLY IC	1	1,2,3
IC1510	C0CBCDG00006	POWER SUPPLY IC	1	1,2,3
IC1520	C0CBCDC00052	POWER SUPPLY IC	1	1,2,3
IC1521	C0CBCBD00048	POWER SUPPLY IC	1	1,2,3
IC1522	C0EBJ0000143	RESET IC	1	1,2,3
IC1601	C0DBAZZ00132	POWER SUPPLY IC	1	1,2,3
IC1701	C0DBAZZ00132	POWER SUPPLY IC	1	1,2,3
IC3001	C1AB00002379	INTEGRATED CIRCUIT	1	1,2,3
IC4009	C0ABBB000216	AMPLIFIERS	1	1,2,3
IC4011	C0DBAHD00013	VOLTAGE REGULATOR	1	1,2,3
IC4012	C0ABBB000118	OPERATION AMP	1	1,2,3
IC4901	B3ZAZ0000017	OPTICAL LINK	1	1,2,3
IC6101	C0JBAZ002116	INTEGRATED CIRCUIT	1	1,2,3
IC6102	C0JBAZ002116	INTEGRATED CIRCUIT	1	1,2,3
IC6103	MN8647011	HDMI LSI IC	1	1,2,3
IC6104	C0CBCBD00048	POWER SUPPLY IC	1	1,2,3
IC6105	C0CBCDC00052	POWER SUPPLY IC	1	1,2,3
IC6107	C0JBAB000604	INTEGRATED CIRCUIT	1	1,2,3
IC7301	C1AB00002225	INTEGRATED CIRCUIT	1	1,2,3

Ref. No.	Part No.	Part Name & Description	Pcs	Remarks
IC7302	C0EAH0000051	RESET IC	1	1,2,3
IC7401	C0CBCYG00004	POWER SUPPLY IC	1	1,2,3
IC7402	C0CBCDC00052	POWER SUPPLY IC	1	1,2,3
IC7403	C0CBCDD00025	POWER SUPPLY IC	1	1,2,3
IC7404	RFKFM6016KT	EEPROM IC	1	1,2,3 [SPC]
IC7501	C2CBJG000728	INTEGRATED CIRCUIT	1	1,2,3
IC7502	C0EBE0000504	INTEGRATED CIRCUIT	1	1,2,3
IC7504	C0HBB0000044	DISPLAY DRIVER IC	1	1,2,3
IC7505	C0EBJ0000336	RESET IC	1	1,2,3
IC7507	C0ABBA000073	INTEGRATED CIRCUIT	1	1,2,3
IP1501	K5H302100004	CHIP FUSE	1	1,2,3
IP1601	K5H3022A0013	FUSE	1	⚠1,2,3
IP7501	K5H7512A0010	FUSE	1	⚠1,2,3
IR7501	PNA4618M09VT	IR RECEIVER	1	1,2,3
JK3001	K1U822B00003	CONNECTOR	1	1,2,3
JK3002	K2HE1YYB0002	JACKS	1	1,2,3
JK3901	K1FB242B0005	21 PIN SCART	1	1,2,3
JK3903	K2HA306B0085	JACKS	1	1,2,3
JW7501	REZD0019	MAIN/FRONT CABLE U	1	1,2,3
K7303	D0YBR0000020	CHIP RESISTOR	1	1,2,3
K7308	D0YBR0000020	CHIP RESISTOR	1	1,2,3
K7503	D0YBR0000020	CHIP RESISTOR	1	1,2,3
K7504	D0YBR0000020	CHIP RESISTOR	1	1,2,3
K7808	D0YBR0000020	CHIP RESISTOR	1	1,2,3
K7809	D0YBR0000020	CHIP RESISTOR	1	2,3
K7810	D0YBR0000020	CHIP RESISTOR	1	1,2,3
L1120	G0B233D00001	LINE FILTER	1	⚠1,2,3
L1121	G0B233D00001	LINE FILTER	1	⚠1,2,3
L1270	G0A100H00025	CHOKE COIL	1	1,2,3
L1400	G0A100HA0023	CHOKE COIL	1	1,2,3
L1505	G0A100HA0023	CHOKE COIL	1	1,2,3
L1601	G0A150ZA0041	CHOKE COIL	1	1,2,3
L1701	G0A220ZA0041	CHOKE COIL	1	1,2,3
L4901	G0C220KA0065	CHOKE COIL RADIAL	1	1,2,3
L56101	J0MAB0000170	BEAD CORE	1	1,2,3
L56102	J0MAB0000170	BEAD CORE	1	1,2,3
L56103	J0MAB0000170	BEAD CORE	1	1,2,3
L56104	J0MAB0000170	BEAD CORE	1	1,2,3
L7303	G0C1R0JA0019	CHOKE COIL AXIAL	1	1,2,3
L7304	G0C2R2JA0019	CHOKE COIL AXIAL	1	1,2,3
L7401	G0A220GA0026	CHOKE COIL RADIAL	1	1,2,3
L7402	G0A220GA0026	CHOKE COIL RADIAL	1	1,2,3
L7501	G0C390JA0055	PEAKING COIL RADIAL	1	1,2,3
L7502	G0C220JA0019	CHOKE COIL AXIAL	1	1,2,3
LB1126	ERJ6GEY0R00Z	CHIP RESISTOR	1	1,2,3
LB1502	J0JKB0000003	BEAD CORE	1	1,2,3
LB1503	J0JKB0000003	BEAD CORE	1	1,2,3
LB1504	J0JKB0000003	BEAD CORE	1	1,2,3
LB1506	J0JKB0000003	BEAD CORE	1	1,2,3
LB1600	J0JHC0000048	BEAD CORE	1	1,2,3
LB1700	J0JHC0000048	BEAD CORE	1	1,2,3
LB3001	J0JGC0000020	BEAD CORE	1	1,2,3
LB3002	J0JGC0000020	BEAD CORE	1	1,2,3
LB3003	J0JGC0000020	BEAD CORE	1	1,2,3

Ref. No.	Part No.	Part Name & Description	Pcs	Remarks
LB3005	J0JBC0000011	BEAD CORE	1	1,2,3
LB3006	J0JBC0000019	COIL (RLBV252AV-Y)	1	1,2,3
LB3007	J0JBC0000011	BEAD CORE	1	1,2,3
LB3008	J0JBC0000019	COIL (RLBV252AV-Y)	1	1,2,3
LB3009	D0YBR0000020	CHIP RESISTOR	1	1,2,3
LB3010	D0YBR0000020	CHIP RESISTOR	1	1,2,3
LB3011	D0YBR0000020	CHIP RESISTOR	1	1,2,3
LB3012	J0JBC0000011	BEAD CORE	1	1,2,3
LB3013	J0JBC0000011	BEAD CORE	1	1,2,3
LB3907	J0JBC0000011	BEAD CORE	1	1,2,3
LB3908	J0JBC0000011	BEAD CORE	1	1,2,3
LB3911	J0JGC0000020	BEAD CORE	1	1,2,3
LB3912	J0JBC0000011	BEAD CORE	1	1,2,3
LB3913	J0JBC0000011	BEAD CORE	1	1,2,3
LB6101	J0JHC0000032	BEAD CORE	1	1,2,3
LB6102	J0JHC0000032	BEAD CORE	1	1,2,3
LB6103	J0JHC0000032	BEAD CORE	1	1,2,3
LB6104	J0JCC0000119	FERRITE CORE	1	1,2,3
LB6105	J0JCC0000119	FERRITE CORE	1	1,2,3
LB6106	J0JCC0000119	FERRITE CORE	1	1,2,3
LB6107	J0JCC0000119	FERRITE CORE	1	1,2,3
LB6108	J0JHC0000032	BEAD CORE	1	1,2,3
LB6109	J0JHC0000032	BEAD CORE	1	1,2,3
LB6110	J0JHC0000032	BEAD CORE	1	1,2,3
LB6111	J0JHC0000032	BEAD CORE	1	1,2,3
LB6112	J0JHC0000032	BEAD CORE	1	1,2,3
LB6115	J0JHC0000032	BEAD CORE	1	1,2,3
LB6116	J0JHC0000032	BEAD CORE	1	1,2,3
LB6801	J0JHC0000032	BEAD CORE	1	1,2,3
LB6802	J0JHC0000045	BEAD CORE	1	1,2,3
LB7301	J0JCC0000124	BEAD CORE	1	1,2,3
LB7302	J0JCC0000124	BEAD CORE	1	1,2,3
LB7303	J0JCC0000080	BEAD CORE	1	1,2,3
LB7304	J0JHC0000032	BEAD CORE	1	1,2,3
LB7401	J0JGC0000020	BEAD CORE	1	1,2,3
LB7402	J0JKB0000012	BEAD CORE	1	1,2,3
LB7403	J0JKB0000012	BEAD CORE	1	1,2,3
LB7404	J0JKB0000012	BEAD CORE	1	1,2,3
LB7405	J0JKB0000012	BEAD CORE	1	1,2,3
LB7406	J0JCC0000164	BEAD CORE	1	1,2,3
LB7407	J0JKB0000012	BEAD CORE	1	1,2,3
LB7408	J0JCC0000164	BEAD CORE	1	1,2,3
LB7409	J0JKB0000012	BEAD CORE	1	1,2,3
LB7410	J0JCC0000103	BEAD CORE	1	1,2,3
LB7411	J0JCC0000164	BEAD CORE	1	1,2,3
LB7412	J0JCC0000164	BEAD CORE	1	1,2,3
LB7413	J0JCC0000164	BEAD CORE	1	1,2,3
LB7414	J0JCC0000164	BEAD CORE	1	1,2,3
LB7415	J0JCC0000103	BEAD CORE	1	1,2,3
LB7416	J0JCC0000164	BEAD CORE	1	1,2,3
LB7417	J0JCC0000103	BEAD CORE	1	1,2,3
LB7418	J0JCC0000103	BEAD CORE	1	1,2,3
LB7419	J0JCC0000103	BEAD CORE	1	1,2,3
LB7420	J0JCC0000164	BEAD CORE	1	1,2,3
LB7501	D0YBR0000020	CHIP RESISTOR	1	1,2,3
LB7502	D0YBR0000020	CHIP RESISTOR	1	1,2,3
LB7507	D0YBR0000020	CHIP RESISTOR	1	1,2,3

[illegible]	[illegible]	[illegible]	[illegible]	[illegible]

Ref. No.	Part No.	Part Name & Description	Pcs	Remarks
LB7508	D0YBR0000020	CHIP RESISTOR	1	1,2,3
LB7509	J0JCC0000060	BEAD CORE	1	1,2,3
LB7510	D0YBR0000020	CHIP RESISTOR	1	1,2,3
LB7515	D0YBR0000020	CHIP RESISTOR	1	1,2,3
LB7516	D0YBR0000020	CHIP RESISTOR	1	1,2,3
LB7517	D0YBR0000020	CHIP RESISTOR	1	1,2,3
LB7802	J0JHC0000032	BEAD CORE	1	1,2,3
LB7803	J0JHC0000032	BEAD CORE	1	1,2,3
LB7804	J0JHC0000032	BEAD CORE	1	1,2,3
P1101	K2AA2H000007	AC INLET	1	⚠1,2,3
P1102	K1KB23A00004	CONNECTOR	1	1,2,3
P1103	K1KA03AA0192	CONNECTOR	1	1,2,3
P1501	K1KA23A00003	CONNECTOR	1	1,2,3
P1503	K1KA04AA0180	CONNECTOR	1	1,2,3
P37001	K1KA06B00181	CONNECTOR	1	1,2,3
P37002	K2HZ104B0012	CONNECTOR	1	1,2,3
P56101	K1KY10BA0033	CONNECTOR	1	1,2,3
P56102	K1FA119E0002	CONNECTOR	1	1,2,3
P6801	K1NA09E00075	CONNECTOR	1	1,2,3
P6802	K1MY20AA0021	CONNECTOR	1	1,2,3
P7402	K1KA88A00002	CONNECTOR	1	1,2,3
P7505	K1KY10AA0107	CONNECTOR	1	1,2,3
PP7401	K1KA18AA0288	CONNECTOR	1	1,2,3
PS7801	K1KB18B00012	CONNECTOR	1	1,2,3
Q1200	B3PBA0000402	PHOTO COUPLER	1	⚠1,2,3
Q1501	B1DHED000008	TRANSISTOR	1	1,2,3
Q1509	B1DHED000008	TRANSISTOR	1	1,2,3
Q1600	B1DHED000008	TRANSISTOR	1	1,2,3
Q1700	B1DHDD000022	TRANSISTOR	1	1,2,3
Q4006	2SD132800L	CHIP TRANSISTOR	1	1,2,3
Q4007	2SD132800L	CHIP TRANSISTOR	1	1,2,3
Q4008	2SD132800L	CHIP TRANSISTOR	1	1,2,3
Q4009	2SD132800L	CHIP TRANSISTOR	1	1,2,3
Q56001	2SD1819A0L	TRANSISTOR	1	1,2,3
Q56002	2SD1819A0L	TRANSISTOR	1	1,2,3
Q56101	2SD1819A0L	TRANSISTOR	1	1,2,3
Q56102	B1CFHA000002	TRANSISTOR	1	1,2,3
Q56103	B1CFHA000002	TRANSISTOR	1	1,2,3
Q56104	2SD1819A0L	TRANSISTOR	1	1,2,3
Q56105	2SD1819A0L	TRANSISTOR	1	1,2,3
Q7401	2SD1819ARL	TRANSISTOR	1	1,2,3
Q7402	2SD1819A0L	TRANSISTOR	1	1,2,3
Q7501	2SB1218A0L	SS-TRANSISTOR	1	1,2,3
Q7502	2SD1819A0L	TRANSISTOR	1	1,2,3
Q7503	2SB1218A0L	SS-TRANSISTOR	1	1,2,3
Q7504	2SD1819A0L	TRANSISTOR	1	1,2,3
Q7505	2SD0601A0L	TRANSISTOR	1	1,2,3
Q7506	2SD0601A0L	TRANSISTOR	1	1,2,3
Q7507	2SD0601A0L	TRANSISTOR	1	1,2,3
Q7508	2SD1819A0L	TRANSISTOR	1	1,2,3
Q7509	2SD0601A0L	TRANSISTOR	1	1,2,3
Q7510	B1BABK000001	POWER TRANSISTOR	1	1,2,3
Q7511	B1ABMD000004	TRANSISTOR	1	1,2,3
Q7802	2SB1218A0L	SS-TRANSISTOR	1	1
QR1501	B1GBCFNN0009	TRANSISTOR	1	1,2,3
QR1503	B1GBCFNN0009	TRANSISTOR	1	1,2,3

Ref. No.	Part No.	Part Name & Description	Pcs	Remarks
QR1800	B1GDCFNN0002	TRANSISTOR	1	1,2,3
QR1801	B1GBCFNN0004	TRANSISTOR	1	1,2,3
QR4002	B1GDCFJJ0008	DIGITAL TRANSISTOR	1	1,2,3
QR4003	B1GBCFJJ0007	TRANSISTOR	1	1,2,3
QR4004	B1GBCFJJ0007	TRANSISTOR	1	1,2,3
QR7401	B1GBCFNN0009	TRANSISTOR	1	1,2,3
QR7402	B1GDCFLL0012	TRANSISTOR	1	1,2,3
QR7403	B1GBCFJA0006	TRANSISTOR	1	1,2,3
QR7404	B1GBCFJA0006	TRANSISTOR	1	1,2,3
QR7507	B1GBCFNA0010	TRANSISTOR	1	1,2,3
QR7508	B1GBCFJN0009	TRANSISTOR	1	1,2,3
R1150	ERJ6GEYJ180V	CHIP RESISTOR	1	1,2,3
R1151	ERJ6GEYJ682V	CHIP RESISTOR	1	1,2,3
R1152	ERJ6GEYJ103V	CHIP RESISTOR	1	1,2,3
R1153	ERJ6GEYJ180V	CHIP RESISTOR	1	1,2,3
R1154	ERJ6GEYG912V	CHIP RESISTOR	1	1,2,3
R1155	ERJ6GEYG752V	CHIP RESISTOR	1	1,2,3
R1156	ERJ6GEYG163V	CHIP RESISTOR	1	1,2,3
R1157	ERJ6GEYG511V	CHIP RESISTOR	1	1,2,3
R1158	ERX2SJR22E	METAL FILM RESISTOR	1	1,2,3
R1200	ERJ6GEYG122V	CHIP RESISTOR	1	1,2,3
R1201	ERJ6GEYG822V	CHIP RESISTOR	1	1,2,3
R1205	ERJ6GEYJ224V	CHIP RESISTOR	1	1,2,3
R1206	ERJ6GEYG242V	CHIP RESISTOR	1	1,2,3
R1207	ERJ6GEYJ103V	CHIP RESISTOR	1	1,2,3
R1208	ERJ6GEYJ222V	CHIP RESISTOR	1	1,2,3
R1209	ERJ6GEYJ102V	CHIP RESISTOR	1	1,2,3
R1210	ERJ6GEYJ102V	CHIP RESISTOR	1	1,2,3
R1502	D0GB103JA057	CHIP RESISTOR	1	1,2,3
R1505	D0GB823JA057	CHIP RESISTOR	1	1,2,3
R1506	D0GB222JA057	CHIP RESISTOR	1	1,2,3
R1507	D0GB822JA057	CHIP RESISTOR	1	1,2,3
R1509	ERJ3RBD393V	CHIP RESISTOR	1	1,2,3
R1510	ERJ3RBD113V	CHIP RESISTOR	1	1,2,3
R1511	ERJ3RBD152V	CHIP RESISTOR	1	1,2,3
R1518	D0GB223JA057	CHIP RESISTOR	1	1,2,3
R1519	D0GB223JA057	CHIP RESISTOR	1	1,2,3
R1601	D1BFR0240001	RESISTOR ARRAY	1	1,2,3
R1602	ERJ6GEYJ513V	CHIP RESISTOR	1	1,2,3
R1603	ERJ6RBD202V	CHIP RESISTOR	1	1,2,3
R1604	ERJ6RBD822V	CHIP RESISTOR	1	1,2,3
R1605	ERJ6RBD272V	CHIP RESISTOR	1	1,2,3
R1701	D1BFR0240001	RESISTOR ARRAY	1	1,2,3
R1702	D0GB513JA057	CHIP RESISTOR	1	1,2,3
R1703	D0YBR0000020	CHIP RESISTOR	1	1,2,3
R1704	ERJ3RBD123V	CHIP RESISTOR	1	1,2,3
R1705	ERJ3RBD562V	CHIP RESISTOR	1	1,2,3
R1800	ERJ6GEYJ471V	CHIP RESISTOR	1	1,2,3
R1801	ERJ6GEYJ104V	CHIP RESISTOR	1	1,2,3
R1802	ERJ6GEYJ472V	CHIP RESISTOR	1	1,2,3
R1803	ERJ6GEYJ103V	CHIP RESISTOR	1	1,2,3
R3001	D0GB102JA057	CHIP RESISTOR	1	1,2,3
R3003	D0GB102JA057	CHIP RESISTOR	1	1,2,3
R3004	D0GB102JA057	CHIP RESISTOR	1	1,2,3
R3006	D0YBR0000020	CHIP RESISTOR	1	1,2,3
R3007	D0GB330JA057	CHIP RESISTOR	1	1,2,3
R3008	D0GB102JA057	CHIP RESISTOR	1	1,2,3

R6000	DOCD1023A00	CHIP RESISTOR	1	1,2,3

Ref. No.	Part No.	Part Name & Description	Pcs	Remarks
R3009	D0GB104JA057	CHIP RESISTOR	1	1,2,3
R3054	D0GB750JA057	CHIP RESISTOR	1	1,2,3
R3055	D0GB750JA057	CHIP RESISTOR	1	1,2,3
R3056	D0GB750JA057	CHIP RESISTOR	1	1,2,3
R3057	D0GB750JA057	CHIP RESISTOR	1	1,2,3
R3058	D0GB750JA057	CHIP RESISTOR	1	1,2,3
R3059	D0GB750JA057	CHIP RESISTOR	1	1,2,3
R3060	D0GB750JA057	CHIP RESISTOR	1	1,2,3
R3061	D0GB750JA057	CHIP RESISTOR	1	1,2,3
R3062	D0GB750JA057	CHIP RESISTOR	1	1,2,3
R3901	D1BB75R0A010	CHIP RESISTOR	1	1,2,3
R3902	D1BB75R0A010	CHIP RESISTOR	1	1,2,3
R3903	D1BB75R0A010	CHIP RESISTOR	1	1,2,3
R3912	D0GB103JA057	CHIP RESISTOR	1	1,2,3
R3913	D0GB103JA057	CHIP RESISTOR	1	1,2,3
R3914	D0GB471JA057	CHIP RESISTOR	1	1,2,3
R3918	D0GB471JA057	CHIP RESISTOR	1	1,2,3
R3919	D1BB75R0A010	CHIP RESISTOR	1	1,2,3
R3920	D1BB75R0A010	CHIP RESISTOR	1	1,2,3
R3921	D1BB75R0A010	CHIP RESISTOR	1	1,2,3
R3922	D0GB471JA057	CHIP RESISTOR	1	1,2,3
R3923	D0GB471JA057	CHIP RESISTOR	1	1,2,3
R3924	ERDS2TJ221T	CARBON RESISTOR	1	1,2,3
R3925	D1BB75R0A010	CHIP RESISTOR	1	1,2,3
R3926	D1BB75R0A010	CHIP RESISTOR	1	1,2,3
R3927	D1BB75R0A010	CHIP RESISTOR	1	1,2,3
R3928	D0GB750JA057	CHIP RESISTOR	1	1,2,3
R3929	D0GB750JA057	CHIP RESISTOR	1	1,2,3
R3930	D0GB750JA057	CHIP RESISTOR	1	1,2,3
R3932	D0GB750JA057	CHIP RESISTOR	1	1,2,3
R3934	D0GB750JA057	CHIP RESISTOR	1	1,2,3
R3935	D0GB750JA057	CHIP RESISTOR	1	1,2,3
R3975	D0GB101JA057	CHIP RESISTOR	1	1,2,3
R3976	D0GB101JA057	CHIP RESISTOR	1	1,2,3
R3983	D0GB103JA057	CHIP RESISTOR	1	1,2,3
R3984	D0GB103JA057	CHIP RESISTOR	1	1,2,3
R3987	D0GB473JA057	CHIP RESISTOR	1	1,2,3
R3988	D0GB102JA057	CHIP RESISTOR	1	1,2,3
R3989	D0GB102JA057	CHIP RESISTOR	1	1,2,3
R3990	D0GB473JA057	CHIP RESISTOR	1	1,2,3
R3991	D0GB473JA057	CHIP RESISTOR	1	1,2,3
R3992	D0GB102JA057	CHIP RESISTOR	1	1,2,3
R3993	D0GB102JA057	CHIP RESISTOR	1	1,2,3
R3994	D0GB473JA057	CHIP RESISTOR	1	1,2,3
R4003	D0GB331JA057	CHIP RESISTOR	1	1,2,3
R4004	D0GB103JA057	CHIP RESISTOR	1	1,2,3
R4005	D0GB331JA057	CHIP RESISTOR	1	1,2,3
R4006	D0GB823JA057	CHIP RESISTOR	1	1,2,3
R4007	D0GB823JA057	CHIP RESISTOR	1	1,2,3
R4008	D0GB823JA057	CHIP RESISTOR	1	1,2,3
R4010	D0GB473JA057	CHIP RESISTOR	1	1,2,3
R4011	D0GB473JA057	CHIP RESISTOR	1	1,2,3
R4013	D0GB823JA057	CHIP RESISTOR	1	1,2,3
R4046	D0HB752ZA002	METAL FILM RESISTOR	1	1,2,3
R4047	D0HB752ZA002	METAL FILM RESISTOR	1	1,2,3
R4055	D0HB123ZA002	METAL FILM RESISTOR	1	1,2,3
R4057	D0HB123ZA002	METAL FILM RESISTOR	1	1,2,3

R1007	DCR0122A002	METAL FILM RESISTOR	1	1,2,3

Ref. No.	Part No.	Part Name & Description	Pcs	Remarks
R4066	D0HB103ZA002	METAL FILM RESISTOR	1	1,2,3
R4067	D0HB103ZA002	METAL FILM RESISTOR	1	1,2,3
R4071	D0GB473JA057	CHIP RESISTOR	1	1,2,3
R4074	D0GB473JA057	CHIP RESISTOR	1	1,2,3
R4076	D0GB821JA057	CHIP RESISTOR	1	1,2,3
R4077	D0GB101JA057	CHIP RESISTOR	1	1,2,3
R4078	D0GB272JA057	CHIP RESISTOR	1	1,2,3
R4079	D0GB272JA057	CHIP RESISTOR	1	1,2,3
R4080	D0GB101JA057	CHIP RESISTOR	1	1,2,3
R4081	D0GB821JA057	CHIP RESISTOR	1	1,2,3
R4088	D0GB272JA057	CHIP RESISTOR	1	1,2,3
R4089	D0GB272JA057	CHIP RESISTOR	1	1,2,3
R4090	D0GB121JA057	CHIP RESISTOR	1	1,2,3
R4093	D0GB121JA057	CHIP RESISTOR	1	1,2,3
R4094	D0GB223JA057	CHIP RESISTOR	1	1,2,3
R56001	ERJ2GEJ472X	RESISTOR	1	1,2,3
R56002	ERJ2GEJ473X	RESISTOR	1	1,2,3
R56003	ERJ2GEJ225X	RESISTOR	1	1,2,3
R56004	ERJ2GEJ104X	RESISTOR	1	1,2,3
R56101	ERJ2GEJ220X	RESISTOR	1	1,2,3
R56102	ERJ2GEJ330X	RESISTOR	1	1,2,3
R56103	ERJ2GEJ330X	RESISTOR	1	1,2,3
R56104	ERJ2GEJ330X	RESISTOR	1	1,2,3
R56105	ERJ2GEJ330X	RESISTOR	1	1,2,3
R56106	ERJ2GEJ820X	RESISTOR	1	1,2,3
R56107	ERJ2GEJ330X	RESISTOR	1	1,2,3
R56108	ERJ2GEJ330X	RESISTOR	1	1,2,3
R56109	ERJ2GEJ121X	RESISTOR	1	1,2,3
R56110	ERJ2GEJ330X	RESISTOR	1	1,2,3
R56111	ERJ2GEJ330X	RESISTOR	1	1,2,3
R56112	ERJ2GEJ330X	RESISTOR	1	1,2,3
R56114	ERJ2GEJ330X	RESISTOR	1	1,2,3
R56115	ERJ2GEJ820X	RESISTOR	1	1,2,3
R56116	ERJ2GEJ101X	RESISTOR	1	1,2,3
R56117	ERJ2GEJ151X	RESISTOR	1	1,2,3
R56118	ERJ2GEJ820X	RESISTOR	1	1,2,3
R56119	ERJ2GEJ330X	RESISTOR	1	1,2,3
R56120	ERJ2GEJ151X	RESISTOR	1	1,2,3
R56121	ERJ2GEJ151X	RESISTOR	1	1,2,3
R56122	ERJ2GEJ151X	RESISTOR	1	1,2,3
R56123	ERJ2GEJ511X	RESISTOR	1	1,2,3
R56124	ERJ2GEJ103X	RESISTOR	1	1,2,3
R56125	ERJ2GEJ202X	RESISTOR	1	1,2,3
R56126	ERJ2GEJ202X	RESISTOR	1	1,2,3
R56127	ERJ2GEJ103X	RESISTOR	1	1,2,3
R56128	ERJ2GEJ202X	RESISTOR	1	1,2,3
R56129	ERJ2GEJ202X	RESISTOR	1	1,2,3
R56130	ERJ2GEJ273X	RESISTOR	1	1,2,3
R56131	ERJ2GEJ221X	RESISTOR	1	1,2,3
R56132	ERJ2GEJ224X	RESISTOR	1	1,2,3
R56133	ERJ2GEJ104X	RESISTOR	1	1,2,3
R56134	ERJ2GEJ470X	RESISTOR	1	1,2,3
R56135	ERJ2GEJ470X	RESISTOR	1	1,2,3
R56137	ERJ2GE0R00X	RESISTOR	1	1,2,3
R56138	ERJ2GE0R00X	RESISTOR	1	1,2,3
R56139	ERJ2GEJ820X	RESISTOR	1	1,2,3
R56140	ERJ2GEJ8R2X	RESISTOR	1	1,2,3

[illegible]	[illegible]	[illegible]	[illegible]	[illegible]

Ref. No.	Part No.	Part Name & Description	Pcs	Remarks
R56142	ERJ2GEJ330X	RESISTOR	1	1,2,3
R56143	ERJ2GEJ330X	RESISTOR	1	1,2,3
R56144	ERJ2GEJ8R2X	RESISTOR	1	1,2,3
R56145	ERJ2GEJ8R2X	RESISTOR	1	1,2,3
R56146	ERJ2GEJ8R2X	RESISTOR	1	1,2,3
R56147	ERJ2GEJ8R2X	RESISTOR	1	1,2,3
R56148	ERJ2GEJ8R2X	RESISTOR	1	1,2,3
R56149	ERJ2GEJ8R2X	RESISTOR	1	1,2,3
R56150	ERJ2GEJ8R2X	RESISTOR	1	1,2,3
R56151	ERJ2GEJ820X	RESISTOR	1	1,2,3
R56152	ERJ2GEJ820X	RESISTOR	1	1,2,3
R56153	ERJ2GEJ820X	RESISTOR	1	1,2,3
R56154	ERJ2GEJ820X	RESISTOR	1	1,2,3
R56155	ERJ2GEJ820X	RESISTOR	1	1,2,3
R56156	ERJ2GEJ820X	RESISTOR	1	1,2,3
R56157	ERJ2GEJ820X	RESISTOR	1	1,2,3
R56158	ERJ2GEJ152X	RESISTOR	1	1,2,3
R56159	ERJ2GEJ332X	RESISTOR	1	1,2,3
R56160	ERJ2GEJ223X	RESISTOR	1	1,2,3
R56161	ERJ2GEJ470X	RESISTOR	1	1,2,3
R6801	D0GB101JA057	CHIP RESISTOR	1	1,2,3
R6802	D0GB220JA057	CHIP RESISTOR	1	1,2,3
R6803	D0GB220JA057	CHIP RESISTOR	1	1,2,3
R6804	D0GB223JA057	CHIP RESISTOR	1	1,2,3
R6805	D0GB123JA057	CHIP RESISTOR	1	1,2,3
R6807	D0GB223JA057	CHIP RESISTOR	1	1,2,3
R7304	D0GB101JA057	CHIP RESISTOR	1	1,2,3
R7307	D0YBR0000020	CHIP RESISTOR	1	1,2,3
R7311	D0GB221JA057	CHIP RESISTOR	1	2,3
R7312	ERJ3GEYF221V	CHIP RESISTOR	1	1,2,3
R7313	ERJ3GEYF221V	CHIP RESISTOR	1	1,2,3
R7314	D0YBR0000020	CHIP RESISTOR	1	2,3
R7315	D0YBR0000020	CHIP RESISTOR	1	2,3
R7317	D0YBR0000020	CHIP RESISTOR	1	1,2,3
R7319	D0YBR0000020	CHIP RESISTOR	1	1,2,3
R7322	D0YBR0000020	CHIP RESISTOR	1	1,2,3
R7324	D0GB221JA057	CHIP RESISTOR	1	1,2,3
R7325	D0GB221JA057	CHIP RESISTOR	1	1,2,3
R7326	D0YBR0000020	CHIP RESISTOR	1	1,2,3
R7401	D0GB104JA057	CHIP RESISTOR	1	1,2,3
R7402	D0GB103JA057	CHIP RESISTOR	1	1,2,3
R7403	D0GB153JA057	CHIP RESISTOR	1	1,2,3
R7404	D0GB223JA057	CHIP RESISTOR	1	1,2,3
R7405	ERDS2TJ471T	CARBON RESISTOR	1	1,2,3
R7406	D0GB474JA057	CHIP RESISTOR	1	1,2,3
R7407	D0GB103JA057	CHIP RESISTOR	1	1,2,3
R7408	D0GB153JA057	CHIP RESISTOR	1	1,2,3
R7409	D0GB101JA057	CHIP RESISTOR	1	1,2,3
R7410	D0GB821JA057	CHIP RESISTOR	1	1,2,3
R7411	D0GB472JA057	CHIP RESISTOR	1	1,2,3
R7412	D0GB472JA057	CHIP RESISTOR	1	1,2,3
R7414	D0GB472JA057	CHIP RESISTOR	1	1,2,3
R7444	ERJ3RED300V	CHIP RESISTOR	1	1,2,3
R7445	ERJ3RBD682V	CHIP RESISTOR	1	1,2,3
R7446	ERJ3RBD202V	CHIP RESISTOR	1	1,2,3
R7448	D0GB182JA057	CHIP RESISTOR	1	1,2,3
R7501	D0GB102JA057	CHIP RESISTOR	1	1,2,3

R1001	D0CD1023A00	CHIP RESISTOR	1	1,2,3

Ref. No.	Part No.	Part Name & Description	Pcs	Remarks
R7502	D0GB392JA057	CHIP RESISTOR	1	1,2,3
R7503	D0GB104JA057	CHIP RESISTOR	1	1,2,3
R7504	D0GB102JA057	CHIP RESISTOR	1	1,2,3
R7505	D1BB1502A010	CHIP RESISTOR	1	1,2,3
R7506	D0GB104JA057	CHIP RESISTOR	1	1,2,3
R7507	D1BB15010002	CHIP RESISTOR	1	1,2,3
R7508	ERJ3GEYF562V	CHIP RESISTOR	1	1,2,3
R7509	D0GB101JA057	CHIP RESISTOR	1	1,2,3
R7510	D0GB101JA057	CHIP RESISTOR	1	1,2,3
R7511	D0GB101JA057	CHIP RESISTOR	1	1,2,3
R7512	D0GB101JA057	CHIP RESISTOR	1	1,2,3
R7513	D0GB101JA057	CHIP RESISTOR	1	1,2,3
R7514	D0GB101JA057	CHIP RESISTOR	1	1,2,3
R7516	D0GB220JA057	CHIP RESISTOR	1	2,3
R7517	D0GB472JA057	CHIP RESISTOR	1	1,2,3
R7518	ERJ3RBD273V	CHIP RESISTOR	1	1,2,3
R7520	D0GB103JA057	CHIP RESISTOR	1	1,2,3
R7521	D0GB103JA057	CHIP RESISTOR	1	1,2,3
R7522	D0GB473JA057	CHIP RESISTOR	1	1,2,3
R7523	D0YBR0000020	CHIP RESISTOR	1	1,2,3
R7524	D0GB101JA057	CHIP RESISTOR	1	1,2,3
R7525	D0YBR0000020	CHIP RESISTOR	1	1,2,3
R7526	D0YBR0000020	CHIP RESISTOR	1	1,2,3
R7527	D0GB101JA057	CHIP RESISTOR	1	1,2,3
R7528	D0GB101JA057	CHIP RESISTOR	1	1,2,3
R7529	D0GB101JA057	CHIP RESISTOR	1	1,2,3
R7530	D0GB223JA057	CHIP RESISTOR	1	1,2,3
R7531	D0GB104JA057	CHIP RESISTOR	1	1,2,3
R7532	D0GB332JA057	CHIP RESISTOR	1	1,2,3
R7533	D0YBR0000020	CHIP RESISTOR	1	1,2,3
R7534	D0GB103JA057	CHIP RESISTOR	1	1,2,3
R7535	D0GB101JA057	CHIP RESISTOR	1	1,2,3
R7536	D0GB101JA057	CHIP RESISTOR	1	1,2,3
R7537	D0GB101JA057	CHIP RESISTOR	1	1,2,3
R7539	D0GB472JA057	CHIP RESISTOR	1	1,2,3
R7540	D0GB103JA057	CHIP RESISTOR	1	1,2,3
R7543	D0GB101JA057	CHIP RESISTOR	1	1,2,3
R7544	D0GB101JA057	CHIP RESISTOR	1	1,2,3
R7548	D0GB472JA057	CHIP RESISTOR	1	1,2,3
R7549	D0GB472JA057	CHIP RESISTOR	1	1,2,3
R7558	D0GB202JA057	CHIP RESISTOR	1	1,2,3
R7559	D0GB202JA057	CHIP RESISTOR	1	1,2,3
R7561	D0GB101JA057	CHIP RESISTOR	1	1,2,3
R7562	D0GB101JA057	CHIP RESISTOR	1	1,2,3
R7564	D0GB101JA057	CHIP RESISTOR	1	1,2,3
R7565	D0GB101JA057	CHIP RESISTOR	1	1,2,3
R7566	D0GB101JA057	CHIP RESISTOR	1	1,2,3
R7567	D0GB101JA057	CHIP RESISTOR	1	1,2,3
R7568	D0GB101JA057	CHIP RESISTOR	1	1,2,3
R7570	D0GB392JA057	CHIP RESISTOR	1	1,2,3
R7571	D0GB101JA057	CHIP RESISTOR	1	1,2,3
R7572	D0GB101JA057	CHIP RESISTOR	1	1,2,3
R7574	D0GB223JA057	CHIP RESISTOR	1	1,2,3
R7575	D0GB101JA057	CHIP RESISTOR	1	1,2,3
R7576	D0GB102JA057	CHIP RESISTOR	1	1,2,3
R7577	D0GB103JA057	CHIP RESISTOR	1	1,2,3
R7579	D0GB223JA057	CHIP RESISTOR	1	1,2,3

[illegible]	[illegible]	[illegible]	[illegible]	[illegible]

Ref. No.	Part No.	Part Name & Description	Pcs	Remarks
R7582	D0GB104JA057	CHIP RESISTOR	1	1,2,3
R7583	D0GB472JA057	CHIP RESISTOR	1	1,2,3
R7584	D0GB473JA057	CHIP RESISTOR	1	1,2,3
R7585	D0GB225JA057	CHIP RESISTOR	1	1,2,3
R7586	D0GB273JA057	CHIP RESISTOR	1	1,2,3
R7587	D0GB224JA057	CHIP RESISTOR	1	1,2,3
R7588	D0GB104JA057	CHIP RESISTOR	1	1,2,3
R7589	D0GB221JA057	CHIP RESISTOR	1	1,2,3
R7590	D0GB104JA057	CHIP RESISTOR	1	1,2,3
R7597	D0GB822JA057	CHIP RESISTOR	1	1,2,3
R7598	D0GB822JA057	CHIP RESISTOR	1	1,2,3
R7599	D0GB822JA057	CHIP RESISTOR	1	1,2,3
R7600	D0GB103JA057	CHIP RESISTOR	1	1,2,3
R7601	D0GB102JA057	CHIP RESISTOR	1	1,2,3
R7606	ERJ3GEYF393V	CHIP RESISTOR	1	1,2,3
R7607	D0GB101JA057	CHIP RESISTOR	1	1,2,3
R7608	ERJ3GEYF433V	CHIP RESISTOR	1	1,2,3
R7612	D0GB562JA057	CHIP RESISTOR	1	1,2,3
R7614	D0GB470JA057	CHIP RESISTOR	1	1,2,3
R7615	D0GB473JA057	CHIP RESISTOR	1	1,2,3
R7616	D0GB473JA057	CHIP RESISTOR	1	1,2,3
R7617	ERDS2TJ271T	CARBON RESISTOR	1	1,2,3
R7619	D0GB103JA057	CHIP RESISTOR	1	1,2,3
R7621	D0GB104JA057	CHIP RESISTOR	1	1,2,3
R7623	D0GB181JA057	CHIP RESISTOR	1	1,2,3
R7624	D0GB103JA057	CHIP RESISTOR	1	1,2,3
R7625	D0GB103JA057	CHIP RESISTOR	1	1,2,3
R7626	D0GB821JA057	CHIP RESISTOR	1	1,2,3
R7627	D0GB303JA057	CHIP RESISTOR	1	1,2,3
R7639	D0GB272JA057	CHIP RESISTOR	1	1,2,3
R7640	D0GB272JA057	CHIP RESISTOR	1	1,2,3
R7641	D0GB272JA057	CHIP RESISTOR	1	1,2,3
R7642	D0GB562JA057	CHIP RESISTOR	1	1,2,3
R7643	ERJ3GEYJ163V	CHIP RESISTOR	1	1,2,3
R7644	D0GB562JA057	CHIP RESISTOR	1	1,2,3
R7648	ERDS2TJ470T	CARBON RESISTOR	1	1,2,3
R7651	D0GB472JA057	CHIP RESISTOR	1	1,2,3
R7653	D0GB101JA057	CHIP RESISTOR	1	1,2,3
R7655	D0GB101JA057	CHIP RESISTOR	1	1,2,3
R7811	ERDS2TJ102T	CARBON RESISTOR	1	1,2,3
R7812	ERJ6GEYJ681V	CHIP RESISTOR	1	1
R7815	D0GB471JA057	CHIP RESISTOR	1	1,2,3
R7816	D0GB471JA057	CHIP RESISTOR	1	1,2,3
R7818	D0GB221JA057	CHIP RESISTOR	1	1
R7820	D0GB102JA057	CHIP RESISTOR	1	1
R7844	ERJ6GEYJ681V	CHIP RESISTOR	1	1
R7845	D0YBR0000020	CHIP RESISTOR	1	2,3
R7846	D0GB562JA057	CHIP RESISTOR	1	2,3
RX6101	D1H83304A024	RESISTOR ARRAY	1	1,2,3
RX6102	D1H83304A024	RESISTOR ARRAY	1	1,2,3
RX6801	EXB38V220JV	RESISTOR ARRAY	1	1,2,3
RX6802	EXB38V123JV	RESISTOR ARRAY	1	1,2,3
S7002	EVQ11A04M	TOUCH SWITCH	1	1,2,3
S7501	EVQ11A04M	TOUCH SWITCH	1	1,2,3
S7502	EVQ11A04M	TOUCH SWITCH	1	1,2,3
S7503	EVQ11A04M	TOUCH SWITCH	1	1,2,3
S7504	EVQ11A04M	TOUCH SWITCH	1	1,2,3

Ref. No.	Part No.	Part Name & Description	Pcs	Remarks
S7505	EVQ11A04M	TOUCH SWITCH	1	1,2,3
S7506	EVQ11A04M	TOUCH SWITCH	1	1,2,3
S7507	EVQ11A04M	TOUCH SWITCH	1	1,2,3
S7508	EVQ11A04M	TOUCH SWITCH	1	1,2,3
T1150	ETS28BF1W6AD	TRANSFORMER	1	1,2,3
T7501	G4D1A0000117	SWITCH. TRANSFORMER	1	1,2,3
TU7801	ENGF7501GF	TUNER	1	2,3
TU7801	ENGF7502GF	TUNER	1	1
VA1110	ERZVA5V471	SURGE ABSORBER	1	1,2,3
VA6101	D4ED13900002	SURGE ABSORBER	1	1,2,3
VA6102	D4ED13900002	SURGE ABSORBER	1	1,2,3
VA6103	EZJZ0V800AA	SURGE ABSORBER	1	1,2,3
VA6104	D4ED13900002	SURGE ABSORBER	1	1,2,3
VA6105	EZJZ0V800AA	SURGE ABSORBER	1	1,2,3
VA6106	D4ED13900002	SURGE ABSORBER	1	1,2,3
VA6107	EZJZ0V800AA	SURGE ABSORBER	1	1,2,3
VA6108	D4ED13900002	SURGE ABSORBER	1	1,2,3
VA6109	EZJZ0V800AA	SURGE ABSORBER	1	1,2,3
VA6110	D4ED13900002	SURGE ABSORBER	1	1,2,3
VA6111	EZJZ0V800AA	SURGE ABSORBER	1	1,2,3
VA6112	D4ED13900002	SURGE ABSORBER	1	1,2,3
VA6113	D4ED13900002	SURGE ABSORBER	1	1,2,3
W501	ERJ6GEY0R00Z	CHIP RESISTOR	1	1,2,3
W501	D0YBR0000020	CHIP RESISTOR	1	1,2,3
W502	D0YBR0000020	CHIP RESISTOR	1	1,2,3
W503	ERJ6GEY0R00Z	CHIP RESISTOR	1	1,2,3
W503	D0YBR0000020	CHIP RESISTOR	1	1,2,3
W504	ERJ6GEY0R00Z	CHIP RESISTOR	1	1,2,3
W504	D0YBR0000020	CHIP RESISTOR	1	1,2,3
W505	ERJ6GEY0R00Z	CHIP RESISTOR	1	1,2,3
W505	D0YBR0000020	CHIP RESISTOR	1	1,2,3
W506	D0YBR0000020	CHIP RESISTOR	1	1,2,3
W507	D0YBR0000020	CHIP RESISTOR	1	1,2,3
W508	ERJ6GEY0R00Z	CHIP RESISTOR	1	1,2,3
W508	D0YBR0000020	CHIP RESISTOR	1	1,2,3
W509	D0YBR0000020	CHIP RESISTOR	1	1,2,3
W510	D0YBR0000020	CHIP RESISTOR	1	1,2,3
W511	D0YBR0000020	CHIP RESISTOR	1	1,2,3
W512	D0YBR0000020	CHIP RESISTOR	1	1,2,3
W513	D0YBR0000020	CHIP RESISTOR	1	1,2,3
W514	ERJ6GEY0R00Z	CHIP RESISTOR	1	1,2,3
W514	D0YBR0000020	CHIP RESISTOR	1	1,2,3
W515	D0YBR0000020	CHIP RESISTOR	1	1,2,3
W516	D0YBR0000020	CHIP RESISTOR	1	1,2,3
W517	ERJ8GEY0R00V	CHIP RESISTOR	1	1,2,3
W517	D0YBR0000020	CHIP RESISTOR	1	1,2,3
W518	ERJ6GEY0R00Z	CHIP RESISTOR	1	1,2,3
W518	D0YBR0000020	CHIP RESISTOR	1	1,2,3
W519	D0YBR0000020	CHIP RESISTOR	1	1,2,3
W520	D0YBR0000020	CHIP RESISTOR	1	1,2,3
W521	ERJ8GEY0R00V	CHIP RESISTOR	1	1,2,3
W521	D0YBR0000020	CHIP RESISTOR	1	1,2,3
W522	D0YBR0000020	CHIP RESISTOR	1	1,2,3
W523	ERJ6GEY0R00Z	CHIP RESISTOR	1	1,2,3
W523	D0YBR0000020	CHIP RESISTOR	1	1,2,3

Ref. No.	Part No.	Part Name & Description	Pcs	Remarks
W524	D0YBR0000020	CHIP RESISTOR	1	1,2,3
W525	D0YBR0000020	CHIP RESISTOR	1	1,2,3
W526	D0YBR0000020	CHIP RESISTOR	1	1,2,3
W527	D0YBR0000020	CHIP RESISTOR	1	1,2,3
W528	D0YBR0000020	CHIP RESISTOR	1	1,2,3
W529	D0YBR0000020	CHIP RESISTOR	1	1,2,3
W529	ERJ6GEY0R00Z	CHIP RESISTOR	1	1,2,3
W530	ERJ6GEY0R00Z	CHIP RESISTOR	1	1,2,3
W531	ERJ6GEY0R00Z	CHIP RESISTOR	1	1,2,3
W532	ERJ6GEY0R00Z	CHIP RESISTOR	1	1,2,3
W533	ERJ6GEY0R00Z	CHIP RESISTOR	1	1,2,3
W534	ERJ6GEY0R00Z	CHIP RESISTOR	1	1,2,3
W534	D0YBR0000020	CHIP RESISTOR	1	1,2,3
W535	D0YBR0000020	CHIP RESISTOR	1	1,2,3
W536	D0YBR0000020	CHIP RESISTOR	1	1,2,3
W537	ERJ6GEY0R00Z	CHIP RESISTOR	1	1,2,3
W537	D0YBR0000020	CHIP RESISTOR	1	1,2,3
W538	ERJ6GEY0R00Z	CHIP RESISTOR	1	1,2,3
W538	D0YBR0000020	CHIP RESISTOR	1	1,2,3
W539	ERJ6GEY0R00Z	CHIP RESISTOR	1	1,2,3
W540	ERJ6GEY0R00Z	CHIP RESISTOR	1	1,2,3
W541	ERJ6GEY0R00Z	CHIP RESISTOR	1	1,2,3
W542	ERJ6GEY0R00Z	CHIP RESISTOR	1	1,2,3
W543	D0YBR0000020	CHIP RESISTOR	1	1,2,3
W544	D0YBR0000020	CHIP RESISTOR	1	1,2,3
W545	ERJ6GEY0R00Z	CHIP RESISTOR	1	1,2,3
W546	ERJ6GEY0R00Z	CHIP RESISTOR	1	1,2,3
W547	D0YBR0000020	CHIP RESISTOR	1	1,2,3
W548	D0YBR0000020	CHIP RESISTOR	1	1,2,3
W549	D0YBR0000020	CHIP RESISTOR	1	1,2,3
W550	D0YBR0000020	CHIP RESISTOR	1	1,2,3
X7301	H0D245500016	CRYSTAL OSCILLATOR	1	1,2,3
X7501	H0D100500018	OSCILLATOR	1	1,2,3
X7502	H0A327200108	CRYSTAL OCSILLATOR	1	1,2,3
ZA1103	EYF52BCY	FUSE HOLDER	1	1,2,3
ZA1104	EYF52BCY	FUSE HOLDER	1	1,2,3
ZA1105	K9ZZ00001279	EARTH FITTING	1	1,2,3
ZA1106	K9ZZ00001279	EARTH FITTING	1	1,2,3
ZA1107	K9ZZ00001279	EARTH FITTING	1	1,2,3
ZB7501	RMN0836A	FL HOLDER	1	1,2,3
ZJ3002	K9ZZ00001279	EARTH FITTING	1	1,2,3
ZJ7401	K9ZZ00001279	EARTH FITTING	1	1,2,3
ZJ7402	K9ZZ00001279	EARTH FITTING	1	1,2,3
ZJ7403	K9ZZ00001279	EARTH FITTING	1	1,2,3
ZJ7404	K9ZZ00001279	EARTH FITTING	1	1,2,3
ZJ7405	K9ZZ00001279	EARTH FITTING	1	1,2,3
ZJ7406	K9ZZ00001279	EARTH FITTING	1	1,2,3
ZJ7501	K9ZZ00001279	EARTH FITTING	1	1,2,3

17.4. SERVICE FIXTURE AND TOOLS

Ref. No.	Part No.	Part Name & Description	Pcs	Remarks
	RFKZ0260	Extension Cable Main PCB - RAM/Digital PCB 88 Pin	1	Same as EH50 series (SPC)
	RFKZ0216	Extension Cable Main PCB - Power PCB 23 Pin	1	Same as EH55/ EH56 series (SPC)
	RFKZ0366	Extension FFC HDMI PCB and HDD - RAM/Digital PCB 40 Pin / 500mm	2	Same as E55/E65 series (SPC)
	RFKZ0168	Extension Cable Power PCB - Fan Motor 3 Pin	1	Same as E50/E55 series (SPC)
	RFKZ0339	Extension Cable Main PCB - HDD 4 Pin	1	Same as E55/E65 series (SPC)
	JZS0484	Eject Pin	1	Same as ES15 (SPC)
	RFKZ03D01K	Lead Free Solder 0.3 mm / 100 g Reel	1	Same as ES15 (SPC)
	RFKZ06D01K	Lead Free Solder 0.6 mm / 100 g Reel	1	Same as ES15 (SPC)
	RFKZ010D01	Lead Free Solder 1.0 mm / 100 g Reel	1	Same as ES15 (SPC)
	RFKZ0316	Solder Remover Lead free 10 W temperature Solder / 180 g	1	Same as ES15 (SPC)
	RFKZ0328	Flux	1	Same as ES15 (SPC)
	RFKZ0329	Bottle of Flux	1	Same as ES15 (SPC)

18. DIAGRAMS FOR PRINTING WITH A4

18.1. BLOCK DIAGRAMS FOR PRINTING WITH A4

18.2. SCHEMATIC DIAGRAMS FOR PRINTING WITH A4

18.3. PRINTED CIRUIT BOARDS FOR PRINTING WITH A4

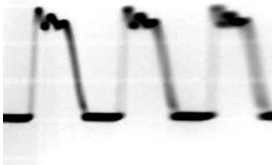

T1150-4,5 STOP
30Vp-p (5 μ sec.div)

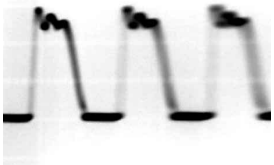

T1150-8 STOP
30Vp-p (5 μ sec.div)

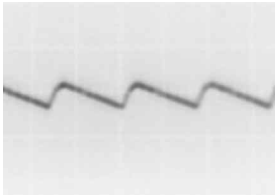

T1150-12 STOP
10Vp-p (2m sec.div)

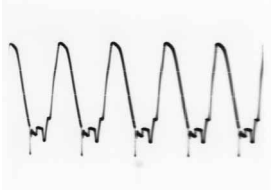

IC1150-1 STOP
10.0Vp-p (5 μ sec.div)

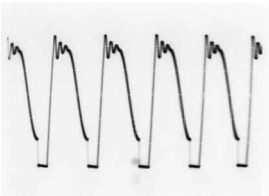

IC1150-9 STOP
580Vp-p (5 μ sec.div)

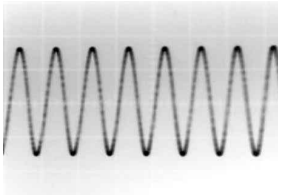

P7402-29,31 REC/PLAY
0.8Vp-p (1m sec.div)

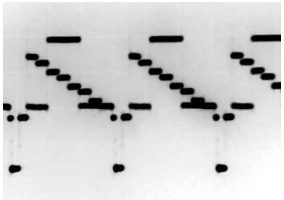

P7402-51 REC/PLAY
1.0Vp-p (20 μ sec.div)

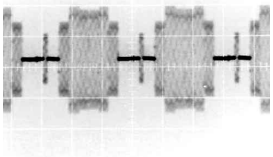

P7402-55 REC/PLAY
0.8Vp-p (20 μ sec.div)

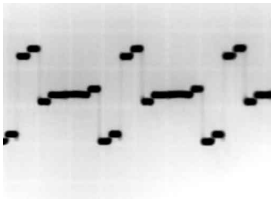

P7402-59 REC/PLAY
0.6Vp-p (20 μ sec.div)

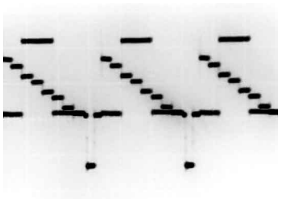

P7402-63 REC/PLAY
1.0Vp-p (20 μ sec.div)

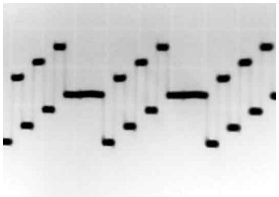

P7402-67 REC/PLAY
0.6Vp-p (20 μ sec.div)

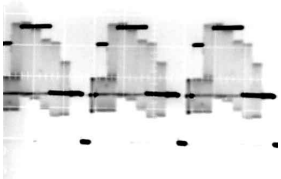

P7402-71 REC/PLAY
1.0Vp-p (20 μ sec.div)

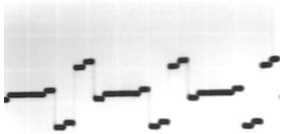

JK3903-2 REC/PLAY
1.0Vp-p (20 μ sec.div)

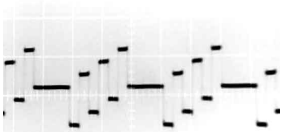

JK3903-4 REC/PLAY
1.0Vp-p (20 μ sec.div)

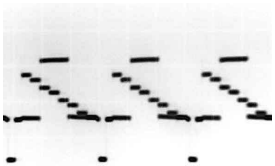

JK3903-6 REC/PLAY
2.0Vp-p (20 μ sec.div)

Ref No.	Q7802																		
MODE	E	C	B																
REC	3.8	1.2	3.1																
PLAY	3.8	1.2	3.1																
STOP	3.8	1.2	3.1																

Ref No.	IC1150										IC1200									
MODE	1	2	3	4	5	6	7	8	9		1	2	3							
REC	3.0	1.5	0	11.6	0	-	310	-	-1523		8.3	2.5	0							
PLAY	3.0	1.5	0	11.6	0	-	310	-	-1523		8.3	2.5	0							
STOP	3.0	1.5	0	11.6	0	-	310	-	-1538		8.3	2.5	0							
Ref No.	IC1601										IC1701									
MODE	1	2	3	4	5	6	7	8			1	2	3	4	5	6	7	8		
REC	12.3	4.5	1.2	1.3	0.8	0	7.6	12.3			12.4	4.5	1.2	1.3	0	0	8.5	12.4		
PLAY	12.3	4.5	1.2	1.3	0.8	0	7.6	12.3			12.4	4.5	1.2	1.3	0	0	8.5	12.4		
STOP	12.3	4.5	1.2	1.3	0.8	0	7.6	12.3			12.4	4.5	1.2	1.3	1.2	0	8.5	12.4		
Ref No.	Q1200					Q1600														
MODE	1	2	3	4		1	2	3	4	5	6	7	8							
REC	9.3	8.3	0	1.5		12.3	12.3	12.3	7.6	6.1	6.1	6.1	6.1							
PLAY	9.3	8.3	0	1.5		12.3	12.3	12.3	7.6	6.1	6.1	6.1	6.1							
STOP	9.3	8.3	0	1.5		12.3	12.3	12.3	7.6	6.1	6.1	6.1	6.1							
Ref No.	QR1800				QR1801															
MODE	E	C	B		E	C	B													
REC	11.9	0	12.3		0	4.5	0													
PLAY	11.9	0	12.3		0	4.5	0													
STOP	11.9	0	12.3		0	4.5	0													

Ref No.	P59001																			
MODE	1	2	3	4	5	6	7	8	9	10	11	12	13	14	15	16	17	18	19	20
REC	0	0	0	0	0	0	0	0	0	0	0	0	3.3	12.3	4.9	12.3	3.3	0	4.9	0
PLAY	0	0	0	0	0	0	0	0	0	0	0	0	3.3	12.3	4.9	12.3	3.3	0	4.9	0
STOP	0	0	0	0	0	0	0	0	0	0	0	0	3.3	12.3	4.9	12.3	3.3	0	4.9	0
Ref No.	P59001																			
MODE	21	22	23	24	25	26	27	28	29	30	31	32	33	34	35	36	37	38	39	40
REC	3.3	5.1	3.3	5.1	5.0	3.3	2.3	3.1	2.5	4.9	2.5	3.3	0	3.3	0	3.3	0	3.3	2.5	-
PLAY	3.3	5.1	3.3	5.1	5.0	3.3	2.3	3.1	2.5	4.9	2.5	3.3	0	3.3	0	3.3	0	3.3	2.5	-
STOP	3.3	5.1	3.3	5.1	5.0	3.3	2.3	3.2	2.5	4.9	2.5	3.3	0	3.3	0	3.3	0	3.3	2.5	-
Ref No.	P59001																			
MODE	41	42	43	44	45	46	47	48	49	50	51	52	53	54	55	56	57	58	59	60
REC	2.5	3.2	0	1.7	0	0	0	3.3	0	3.3	1.1	-	0	0.3	1.5	3.3	0	-	1.0	4.8
PLAY	2.5	3.2	0	1.7	0	0	0	3.3	0	3.3	1.1	-	0	0.3	1.5	3.3	0	-	1.0	4.8
STOP	2.5	3.2	0	1.7	0	0	0	3.3	0	3.3	1.1	-	0	0.3	1.5	3.3	0	-	1.0	4.8
Ref No.	P59001																			
MODE	61	62	63	64	65	66	67	68	69	70	71	72	73	74	75	76	77	78	79	80
REC	0	4.8	1.1	12.3	0	12.3	1.0	12.3	0	12.3	1.3	12.3	0	12.3	2.1	5.0	0	0	-	-
PLAY	0	4.8	1.1	12.3	0	12.3	1.0	12.3	0	12.3	1.3	12.3	0	12.3	2.1	5.0	0	0	-	-
STOP	0	4.8	1.1	12.3	0	12.3	1.0	12.3	0	12.3	1.3	12.3	0	12.3	2.1	5.0	0	0	-	-
Ref No.	P59001																			
MODE	81	82	83	84	85	86	87	88												
REC	0	0	0	.33	0	0	0	0												
PLAY	0	0	0	0.3	0	0	0	0												
STOP	0	0	0	0.3	0	0	0	0												

Remote Control

DVD

Stand-by/on switch
Press to switch the unit from on to stand-by mode or vice versa. In stand-by mode, the unit is still consuming a small amount of power.
Switching this unit into standby mode does not disconnect it from the mains.

DRIVE SELECT: Select the HDD, DVD or SD drive.

Direction buttons in the menu guide.
Select groups or titles.

ENTER: Select or save a setting.

Still picture or time loop playback.

Display the programme information from the TV GUIDE or the Banner.

PROG/CHECK

Check / Change a Timer recording.

SUB MENU

Launch sub menus.

RETURN

Return to the previous menu.

ShowView

ShowView menu

SLOW/SEARCH

Search or slow motion playback.

STOP

Stops recording, replay or forward / reverse action

PAUSE

Pause a recording or playback.

REC

Start the recording.

REC MODE

Record mode button XP, SP, LP, EP

EXT LINK

Record with external recording control.

DIRECT TV REC

Direct TV recording to DVD/HDD.

AUDIO

Select the disc audio canal.

STATUS

Show status messages.

DISPLAY

Show on-screen menu.

TV

Turn the television set on and off.

AV

Select the AV input on the television set.

CH: Select the channel on the television set.
VOLUME: Volume control of the television set.

PAGE

CH: Select the channel on the Recorder.
PAGE: Scroll in the electronic TV Guide.

Number buttons - direct input

VCD	5: 0 5	15: 1 5
JPEG MP3	5: 0 0 5	15: 0 1 5
JPEG	5: 0 0 0 5	15: 0 0 1 5

GUIDE: Launch the TV Guide menu.

DIRECT NAVIGATOR: title view
TOP MENU: Main menu of DVD-video.

FUNCTION selection menu.

Cancel a function.

INPUT SELECT

Switch button of the AV input between AV1, AV2 AV3 (front), AV4 and DV in.

DELETE

Delete items

PLAY/x1.3

Starts playback.

PLAY/ x1.3
RAM - You can increase the playback speed
Hold PLAY▶during playback.

SKIP

Skip chapters, titles, or pictures.

Menu guide (red button): Profile, Guide, Digital Text, Manual Tuning

Menu guide (green button): Profile, Guide, Digital Text

CREATE CHAPTER

Menu guide (yellow button): Profile, Guide, Digital Text
CREATE CHAPTER: Deviding a recording into chapters.

MANUAL SKIP

Menu guide (blue button): Profile, Guide, Digital Text
MANUAL SKIP: Jump forwards 30 seconds.

TIME SLIP

Select the time frame.

OPEN/CLOSE

Front Panel Button: Open and close the disc tray

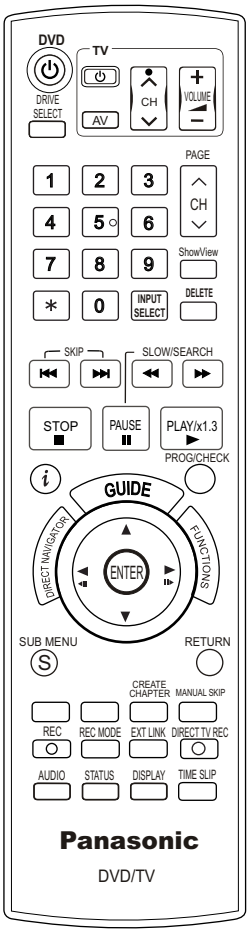

Ref No.	Q1501									Q1509									
MODE	1	2	3	4	5	6	7	8		1	2	3	4	5	6	7	8		
REC	5.2	5.2	5.2	0.6	5.1	5.1	5.1	5.1		12.4	12.4	12.4	6.2	12.3	12.3	12.3	12.3		
PLAY	5.2	5.2	5.2	0.6	5.1	5.1	5.1	5.1		12.4	12.4	12.4	6.2	12.3	12.3	12.3	12.3		
STOP	5.2	5.2	5.2	0.6	5.1	5.1	5.1	5.1		12.4	12.4	12.4	6.2	12.3	12.3	12.3	12.3		

Ref No.	Q4006				Q4007				Q4008				Q4009				Q7401		
MODE	E	C	B		E	C	B		E	C	B		E	C	B		E	C	B
REC	0	0	-0.1		0	0	-0.1		0	0	-0.1		0	0	-0.1		0	11.6	0
PLAY	0	0	-0.1		0	0	-0.1		0	0	-0.1		0	0	-0.1		0	11.6	0
STOP	0	0	-0.1		0	0	-0.1		0	0	-0.1		0	0	-0.1		0	11.6	0

Ref No.	Q7402				Q7501				Q7502				Q7503				Q7504		
MODE	E	C	B		E	C	B		E	C	B		E	C	B		E	C	B
REC	0	0	4.9		2.7	0	2.1		2.0	5.0	1.6		2.7	0	2.1		2.0	5.0	1.6
PLAY	0	0	4.9		2.7	0	2.1		2.0	5.0	1.6		2.7	0	2.1		2.0	5.0	1.6
STOP	0	0	4.9		2.7	0	2.1		2.0	5.0	1.6		2.7	0	2.1		2.0	5.0	1.6

Ref No.	Q7505				Q7506				Q7507				Q7508				Q7510		
MODE	E	C	B		E	C	B		E	C	B		E	C	B		E	C	B
REC	-18.1	5.0	-18.0		0	5.0	0		0	0	4.6		0	4.6	0		0	9.1	-0.2
PLAY	-18.1	5.0	-18.0		0	5.0	0		0	0	4.6		0	4.6	0		0	9.3	-0.1
STOP	-18.1	5.0	-18.0		0	5.0	0		0	0	5.1		0	5.1	0.1		0	9.1	-0.2

Ref No.	Q7511		
MODE	E	C	B
REC	5.1	12.3	5.5
PLAY	5.1	12.3	5.5
STOP	5.1	12.3	5.5

Ref No.	QR1501				QR1503				QR4002				QR4003				QR4004		
MODE	E	C	B		E	C	B		E	C	B		E	C	B		E	C	B
REC	0	0	4.9		0	0	4.9		5.1	-0.1	5.1		0	0	2.3		0	5.1	0
PLAY	0	0	4.9		0	0	4.9		5.1	-0.1	5.1		0	0	2.3		0	5.1	0
STOP	0	0	4.9		0	0	4.9		5.1	-0.1	5.1		0	0	2.3		0	5.1	0

Ref No.	QR7401				QR7402				QR7403				QR7404						
MODE	E	C	B		E	C	B		E	C	B		E	C	B				
REC	0	4.2	0		38.1	38.0	0		0	0	4.9		0	0	0				
PLAY	0	4.2	0		38.1	38.0	0		0	0	4.9		0	0	0				
STOP	0	4.2	0		38.1	38.0	0		0	0	4.9		0	0	0				

Ref No.	QR7507				QR7508		
MODE	E	C	B		E	C	B
REC	0	0	4.9		0	-0.2	0
PLAY	0	0	4.9		0	-0.1	0
STOP	0	0	4.9		0	-0.2	0

Ref No.	IC4009									IC4011										
MODE	1	2	3	4	5	6	7	8		1	2	3	4	5						
REC	5.8	5.8	5.8	0	5.8	5.8	5.8	11.6		3.4	0	4.8	6.1	5.0						
PLAY	5.8	5.8	5.8	0	5.8	5.8	5.8	11.6		3.4	0	4.8	6.1	5.0						
STOP	5.8	5.8	5.8	0	5.8	5.8	5.8	11.6		3.4	0	4.8	6.1	5.0						
Ref No.	IC4012									IC4901										
MODE	1	2	3	4	5	6	7	8		1	2	3								
REC	5.8	5.8	5.8	0	5.8	5.8	5.8	11.6		1.7	5.0	0								
PLAY	5.8	5.8	5.8	0	5.8	5.8	5.8	11.6		1.7	5.0	0								
STOP	5.8	5.8	5.8	0	5.8	5.8	5.8	11.6		1.7	5.0	0								
Ref No.	IC7301																			
MODE	1	2	3	4	5	6	7	8	9	10	11	12	13	14	15	16	17	18	19	20
REC	2.4	2.4	2.4	0	0	2.4	0	2.4	0	2.4	0	-	0	2.9	2.6	0	0	2.8	0	0
PLAY	2.4	2.4	2.4	0	0	2.4	0	2.4	0	2.4	0	-	0	2.9	2.6	0	0	2.8	0	0
STOP	2.4	2.4	2.4	0	0	2.4	0	2.4	0	2.4	0	-	0	2.9	2.6	0	0	2.8	0	0
Ref No.	IC7301																			
MODE	21	22	23	24	25	26	27	28	29	30	31	32	33	34	35	36	37	38	39	40
REC	2.3	0	-	1.5	2.4	1.4	0	5.0	5.0	5.0	2.9	2.4	2.4	2.5	2.5	0	-	2.4	-	-
PLAY	2.3	0	-	1.5	2.4	1.4	0	5.0	5.0	5.0	2.9	2.4	2.4	2.5	2.5	0	-	2.4	-	-
STOP	2.3	0	-	1.5	2.4	1.4	0	5.0	5.0	5.0	2.9	2.4	2.4	2.5	2.5	0	-	2.4	-	-
Ref No.	IC7301																			
MODE	41	42	43	44																
REC	2.4	-	-	0																
PLAY	2.4	-	-	0																
STOP	2.4	-	-	0																
Ref No.	IC7302				IC7401						IC7402									
MODE	1	2	3		1	2	3	4	5		1	2	3	4	5					
REC	5.0	0	4.9		12.4	4.2	11.6	2.6	0		6.1	0	6.1	-	5.1					
PLAY	5.0	0	4.9		12.4	4.2	11.6	2.6	0		6.1	0	6.1	-	5.1					
STOP	5.0	0	4.9		12.4	4.2	11.6	2.6	0		6.1	0	6.1	-	5.1					
Ref No.	IC7403									IC7404										
MODE	1	2	3	4	5	6	7	8		1	2	3	4	5	6	7	8			
REC	5.0	-	3.4	0	4.2	-	-	6.1		0	0	0	0	3.2	3.2	0	3.3			
PLAY	5.0	-	3.4	0	4.2	-	-	6.1		0	0	0	0	3.2	3.2	0	3.3			
STOP	5.0	-	3.4	0	4.2	-	-	6.1		0	0	0	0	3.2	3.2	0	3.3			
Ref No.	IC7501																			
MODE	1	2	3	4	5	6	7	8	9	10	11	12	13	14	15	16	17	18	19	20
REC	0.3	-	4.9	3.8	0.8	0.8	4.4	0	0	2.1	1.2	4.9	1.4	0	2.1	3.3	4.9	3.3	3.2	-
PLAY	0.3	-	4.9	3.8	0.8	0.8	4.4	0	0	0.7	1.2	4.9	1.4	0	2.1	3.3	4.9	3.3	3.2	-
STOP	0.3	-	4.9	4.5	0.9	0.9	4.4	0	0	0.7	1.2	4.9	1.4	0	2.1	3.3	4.9	3.3	3.2	-
Ref No.	IC7501																			
MODE	21	22	23	24	25	26	27	28	29	30	31	32	33	34	35	36	37	38	39	40
REC	3.1	-	3.2	0	-	-	-	-	4.8	4.6	3.3	3.3	0	-	3.3	3.2	3.3	-	0	4.9
PLAY	3.1	-	3.2	0	-	-	-	-	4.8	4.6	3.3	3.3	0	-	3.3	3.2	3.3	-	0	4.9
STOP	3.1	-	3.2	0	-	-	-	-	4.8	4.6	3.3	3.3	0	-	3.3	3.2	3.3	-	0	4.9
Ref No.	IC7501																			
MODE	41	42	43	44	45	46	47	48	49	50	51	52	53	54	55	56	57	58	59	60
REC	0	4.9	4.9	4.8	0	4.9	5.0	5.0	4.9	0	4.9	-	0	-	-0.1	0	0	0	-	5.0
PLAY	0	4.9	4.9	4.8	0	4.9	5.0	5.0	4.9	0	4.9	-	0	-	-0.1	0	0	0	-	5.0
STOP	4.9	4.9	4.9	4.8	0	4.9	5.0	5.0	4.9	0	4.9	-	0	-	-0.1	0	0	0	-	5.0
Ref No.	IC7501																			
MODE	61	62	63	64	65	66	67	68	69	70	71	72	73	74	75	76	77	78	79	80
REC	0	5.0	0	0	4.9	-	-	-	-	-	-	-	4.9	0	5.0	0	-	-	0	-
PLAY	0	5.0	0	0	4.9	-	-	-	-	-	-	-	4.9	0	5.0	0	-	-	0	-
STOP	0	5.0	0	0	4.9	-	-	-	-	-	-	-	4.9	0	5.0	0	-	-	0	-
Ref No.	IC7501																			
MODE	81	82	83	84	85	86	87	88	89	90	91	92	93	94	95	96	97	98	99	100
REC	3.3	0	0	4.7	3.2	5.0	5.0	5.0	2.0	5.0	0	0	2.5	1.2	1.6	0	0	2.0	5.0	0
PLAY	3.3	0	0	4.7	3.2	5.0	5.0	5.0	2.0	5.0	0	0	2.5	1.2	1.6	0	0	2.0	5.0	0
STOP	3.3	0	0	4.7	0	5.0	5.0	5.0	2.0	5.0	0	0	2.5	1.2	1.6	0	0	2.0	5.0	0
Ref No.	IC7502																			
MODE	1	2	3	4	5															
REC	0	0	-	4.9	5.0															
PLAY	0	0	-	4.9	5.0															
STOP	0	0	-	4.9	5.0															
Ref No.	IC7504																			
MODE	1	2	3	4	5	6	7	8	9	10	11	12	13	14	15	16	17	18	19	20
REC	-	-	0	0	2.2	2.2	5.0	4.9	4.4	2.5	-18.1	-21.1	-21.1	-	-21.8	-21.1	-	-17.6	-17.6	-18.1
PLAY	-	-	0	0	2.2	2.2	5.0	4.9	4.4	2.5	-18.1	-17.6	-17.6	-	-21.8	-17.6	-	-21.1	-21.1	-18.1
STOP	-	-	0	0	2.2	2.2	5.0	4.9	4.4	0.8	-18.1	-21.1	-21.1	-	-21.8	-21.1	-	-17.6	-17.6	-18.1
Ref No.	IC7504																			
MODE	21	22	23	24	25	26	27	28	29	30	31	32	33	34	35	36	37	38	39	40
REC	-17.6	-14.2	-18.1	-14.2	-21.0	-17.7	-21.0	-10.8	-17.7	-17.6	-17.6	-17.6	-17.7	-17.6	-17.7	-17.9	-17.9	-	-	-
PLAY	-17.6	-0.6	-18.1	-4.0	-14.3	-17.7	-10.8	-4.0	-17.7	-10.8	-21.1	-21.1	-17.7	-21.4	-17.7	-4.4	-4.4	-	-	-
STOP	-17.6	-14.2	-18.1	-14.2	-21.0	-17.7	-21.0	-10.8	-17.7	-17.6	-17.6	-17.6	-17.7	-17.6	-17.7	-17.9	-17.9	-	-	-
Ref No.	IC7505						IC7507													
MODE	1	2	3	4	5		1	2	3	4	5	6	7	8						
REC	4.9	5.1	0	-	-		5.7	1.3	1.3	0	0.2	0.3	11.2	12.3						
PLAY	4.9	5.1	0	-	-		5.7	1.3	1.3	0	0.2	0.3	11.2	12.3						
STOP	4.9	5.1	0	-	-		5.7	1.3	1.3	0	0.3	0.2	11.2	12.3						

Ref No.	IC1505						IC1506													
MODE	1	2	3	4	5		1	2	3	4	5									
REC	4.1	0	4.9	-	3.3		4.8	6.1	0	5.2	5.2									
PLAY	4.1	0	4.9	-	3.3		4.8	6.1	0	5.2	5.2									
STOP	4.1	0	4.9	-	3.3		4.8	6.1	0	5.2	5.2									
Ref No.	IC1507									IC1510						IC1520				
MODE	1	2	3	4	5	6	7	8		1	2	3	4	5		1	2	3	4	5
REC	5.1	-	3.4	0	6.1	-	-	6.1		6.1	4.9	5.0	-	0		6.1	0	4.8	-	5.1
PLAY	5.1	-	3.4	0	6.1	-	-	6.1		6.1	4.9	5.0	-	0		6.1	0	4.8	-	5.1
STOP	5.1	-	3.4	0	6.1	-	-	6.1		6.1	4.9	5.0	-	0		6.1	0	4.8	-	5.1
Ref No.	IC1521									IC1522										
MODE	1	2	3	4	5	6	7	8		1	2	3	4	5						
REC	3.3	-	2.0	0	4.8	-	-	4.1		-	0	0	5.0	5.1						
PLAY	3.3	-	2.0	0	4.8	-	-	4.1		-	0	0	5.0	5.1						
STOP	3.3	-	2.0	0	4.8	-	-	4.1		-	0	0	5.0	5.1						
Ref No.	IC3001																			
MODE	1	2	3	4	5	6	7	8	9	10	11	12	13	14	15	16	17	18	19	20
REC	2.0	2.5	1.6	0	1.6	5.0	1.6	5.0	0.4	0.3	1.6	0.4	-	1.7	1.7	1.6	0.4	0	1.7	1.7
PLAY	2.0	2.5	1.6	0	1.6	5.0	1.6	5.0	0.4	0.3	1.6	0.4	-	1.7	1.7	1.6	0.4	0	1.7	1.7
STOP	2.0	2.5	1.6	0	1.6	5.0	1.6	5.0	0.4	1.6	1.6	0.4	-	1.7	1.7	1.6	0.4	0	1.7	1.7
Ref No.	IC3001																			
MODE	21	22	23	24	25	26	27	28	29	30	31	32	33	34	35	36	37	38	39	40
REC	0	1.7	1.7	1.7	5.0	1.4	0.1	1.4	0	2.1	1.6	0	1.6	0	2.1	-	1.6	-	1.6	5.0
PLAY	0	1.7	1.7	1.7	5.0	1.4	0.1	1.4	0	2.1	1.6	0	1.6	0	2.1	-	1.6	-	1.6	5.0
STOP	0	1.7	1.6	1.7	5.0	1.4	0.2	1.4	0	2.1	1.6	0	1.6	0	2.1	-	1.6	-	1.6	5.0
Ref No.	IC3001																			
MODE	41	42	43	44	45	46	47	48	49	50	51	52	53	54	55	56	57	58	59	60
REC	1.6	5.1	2.0	0	2.0	11.6	1.6	2.0	4.5	4.4	4.4	4.0	4.5	4.5	-	4.5	9.1	4.4	4.4	4.5
PLAY	1.6	5.1	2.0	0	2.0	11.6	1.6	2.0	4.5	4.4	4.4	4.0	4.5	4.5	-	4.5	9.1	4.4	4.4	4.5
STOP	1.6	5.1	2.0	0	2.0	11.6	1.6	2.0	4.5	4.5	4.0	4.5	4.5	4.4	-	3.9	9.1	4.0	4.3	3.7
Ref No.	IC3001																			
MODE	61	62	63	64	65	66	67	68	69	70	71	72	73	74	75	76	77	78	79	80
REC	4.5	4.5	-	4.5	9.0	0	0	0	0	0	4.5	4.5	4.5	4.5	0	-	9.5	4.5	4.5	0
PLAY	4.5	4.5	-	4.5	9.0	0	0	0	0	0	4.5	4.5	4.5	4.5	0	-	9.5	4.5	4.5	0
STOP	3.7	3.7	-	3.8	9.0	0	0	0	0	0	4.5	4.5	4.5	4.5	0	-	0.3	4.5	4.5	0
Ref No.	IC3001																			
MODE	81	82	83	84	85	86	87	88	89	90	91	92	93	94	95	96	97	98	99	100
REC	2.1	5.0	1.5	5.1	2.1	4.5	3.6	4.8	4.6	5.0	2.0	2.8	2.1	5.1	2.0	0	2.1	0	2.0	2.5
PLAY	2.1	5.0	1.5	5.1	2.1	4.5	3.6	4.8	4.6	5.0	2.0	2.8	2.1	5.1	2.0	0	2.1	0	2.0	2.5
STOP	4.7	5.0	1.5	5.1	2.1	4.5	3.6	4.8	4.6	5.1	5.0	2.8	2.1	5.1	2.0	0	2.1	0	2.0	2.5

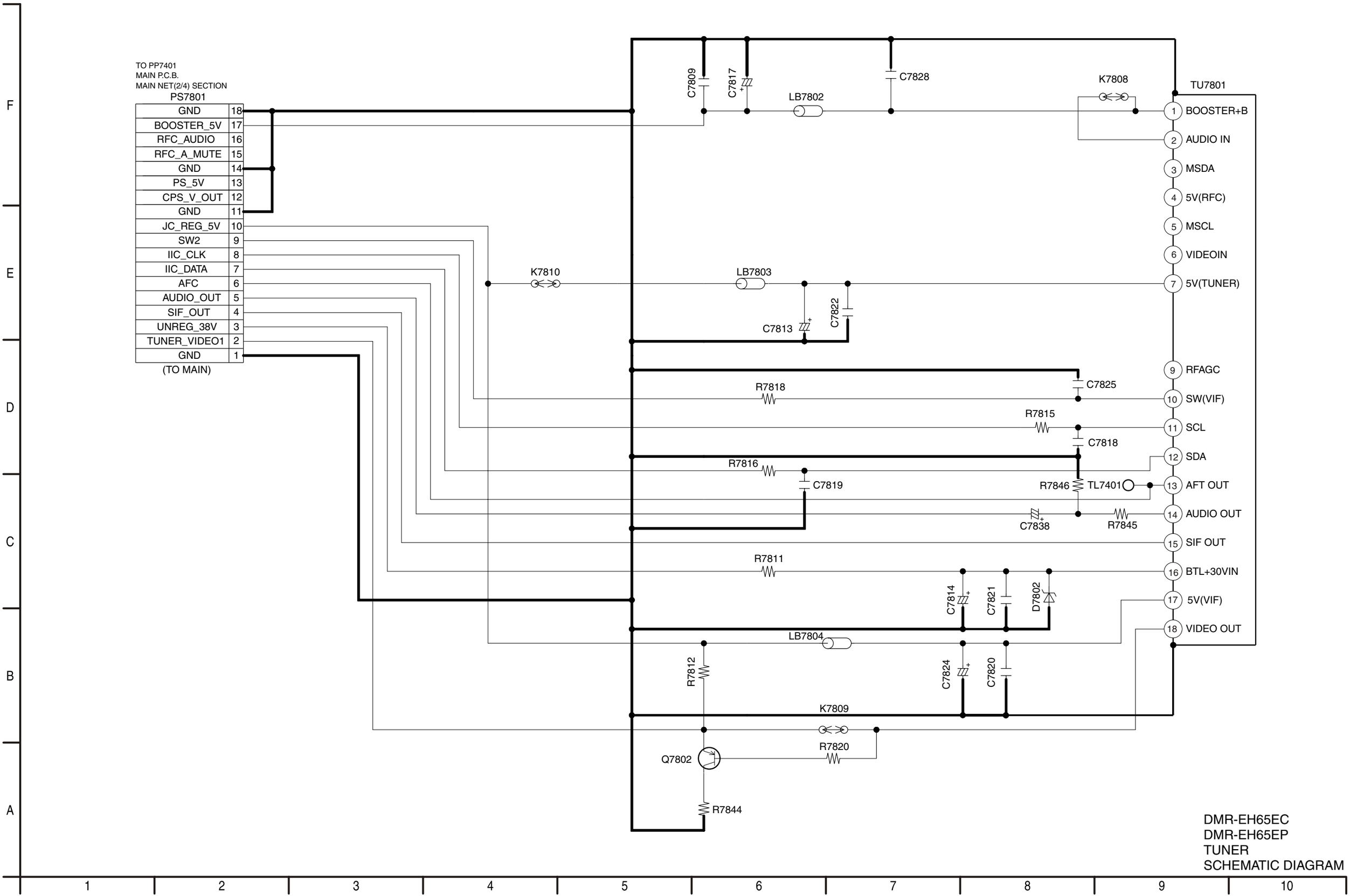

DMR-EH65EC
DMR-EH65EP
TUNER
SCHEMATIC DIAGRAM

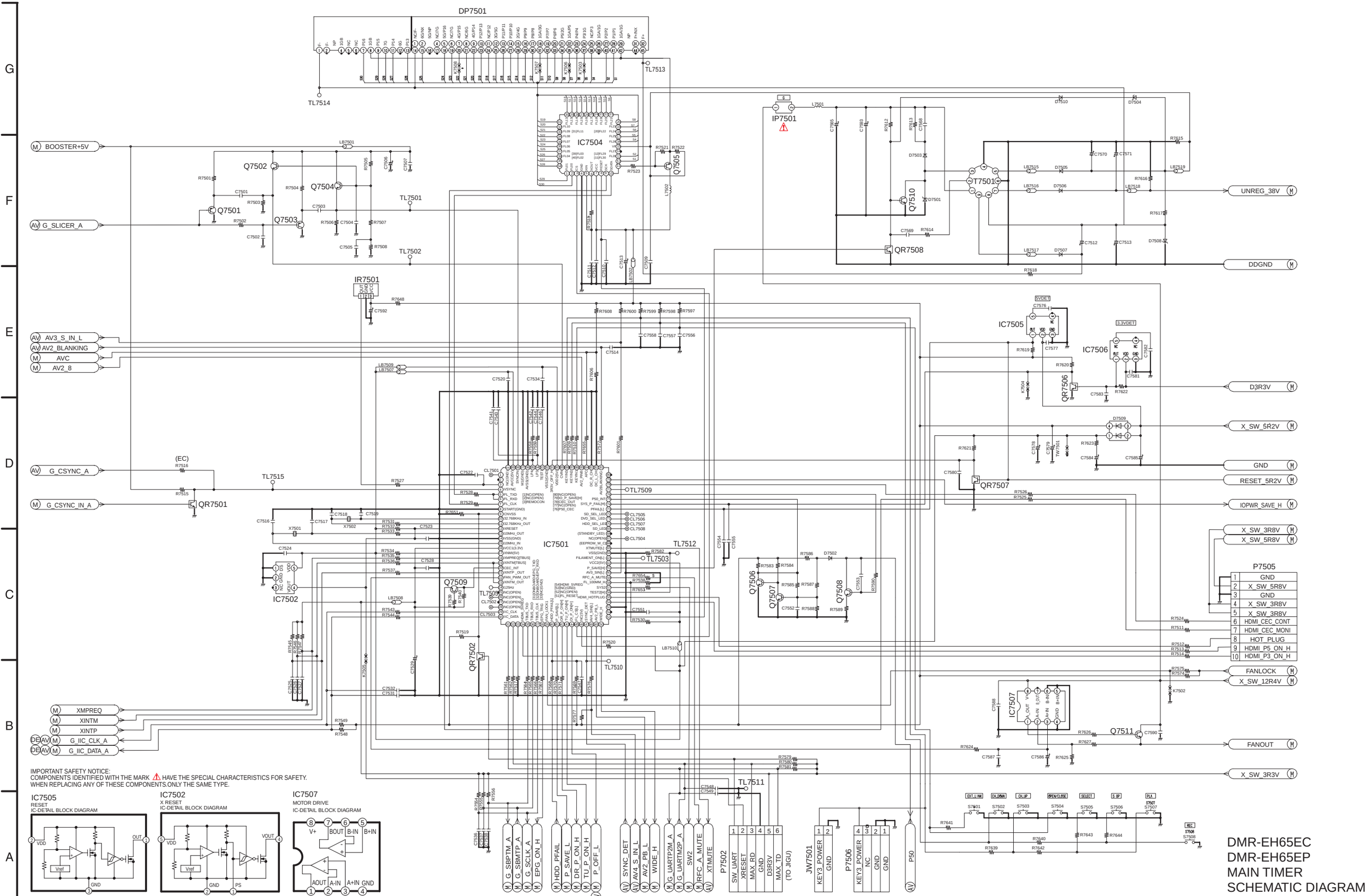

DMR-EH65EC
DMR-EH65EP
MAIN TIMER
SCHEMATIC DIAGRAM

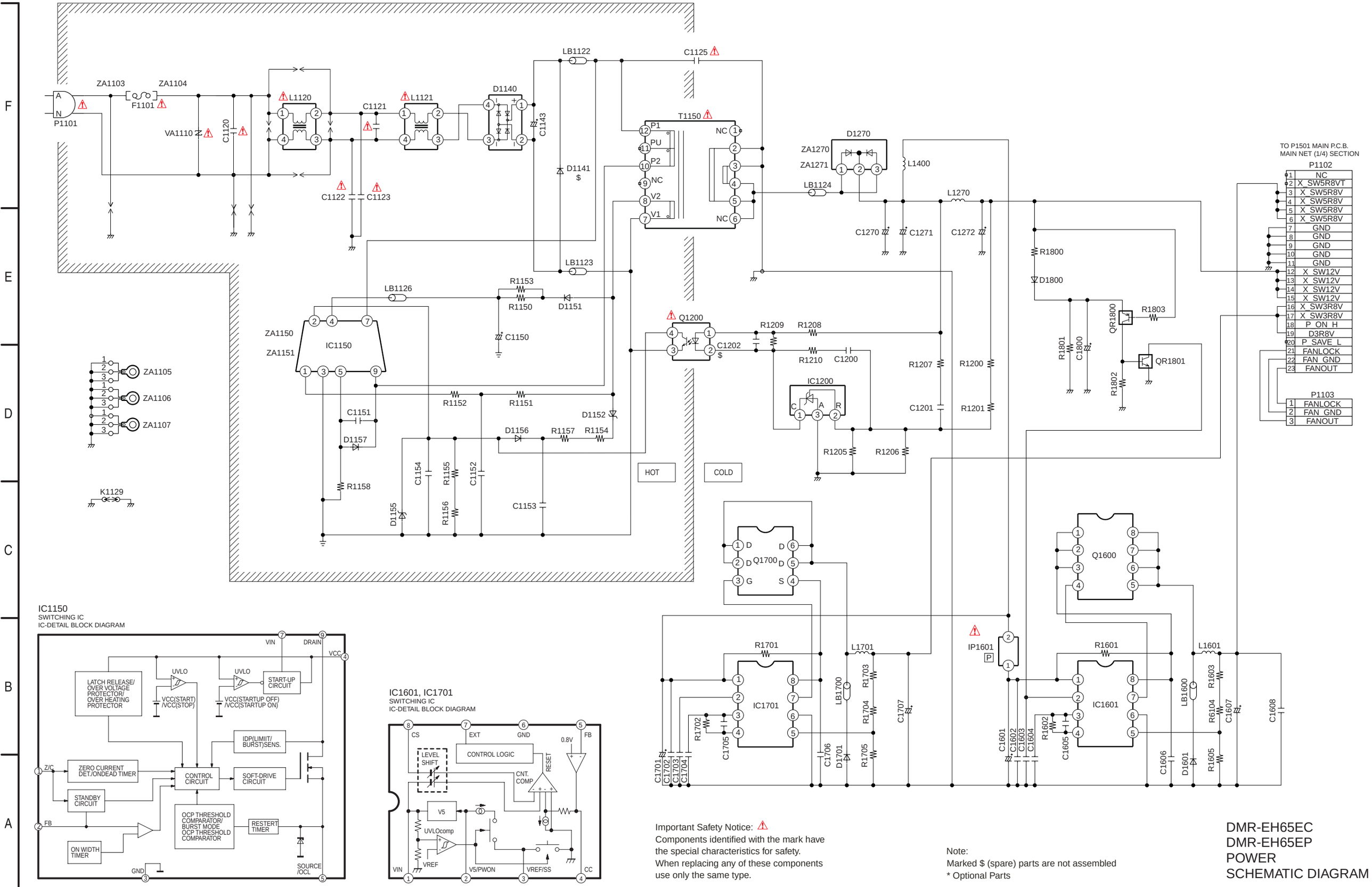

IC1150
SWITCHING IC
IC-DETAIL BLOCK DIAGRAM

IC1601, IC1701
SWITCHING IC
IC-DETAIL BLOCK DIAGRAM

Important Safety Notice: ⚠
Components identified with the mark have the special characteristics for safety.
When replacing any of these components use only the same type.

Note:
Marked $ (spare) parts are not assembled
* Optional Parts

DMR-EH65EC
DMR-EH65EP
POWER
SCHEMATIC DIAGRAM

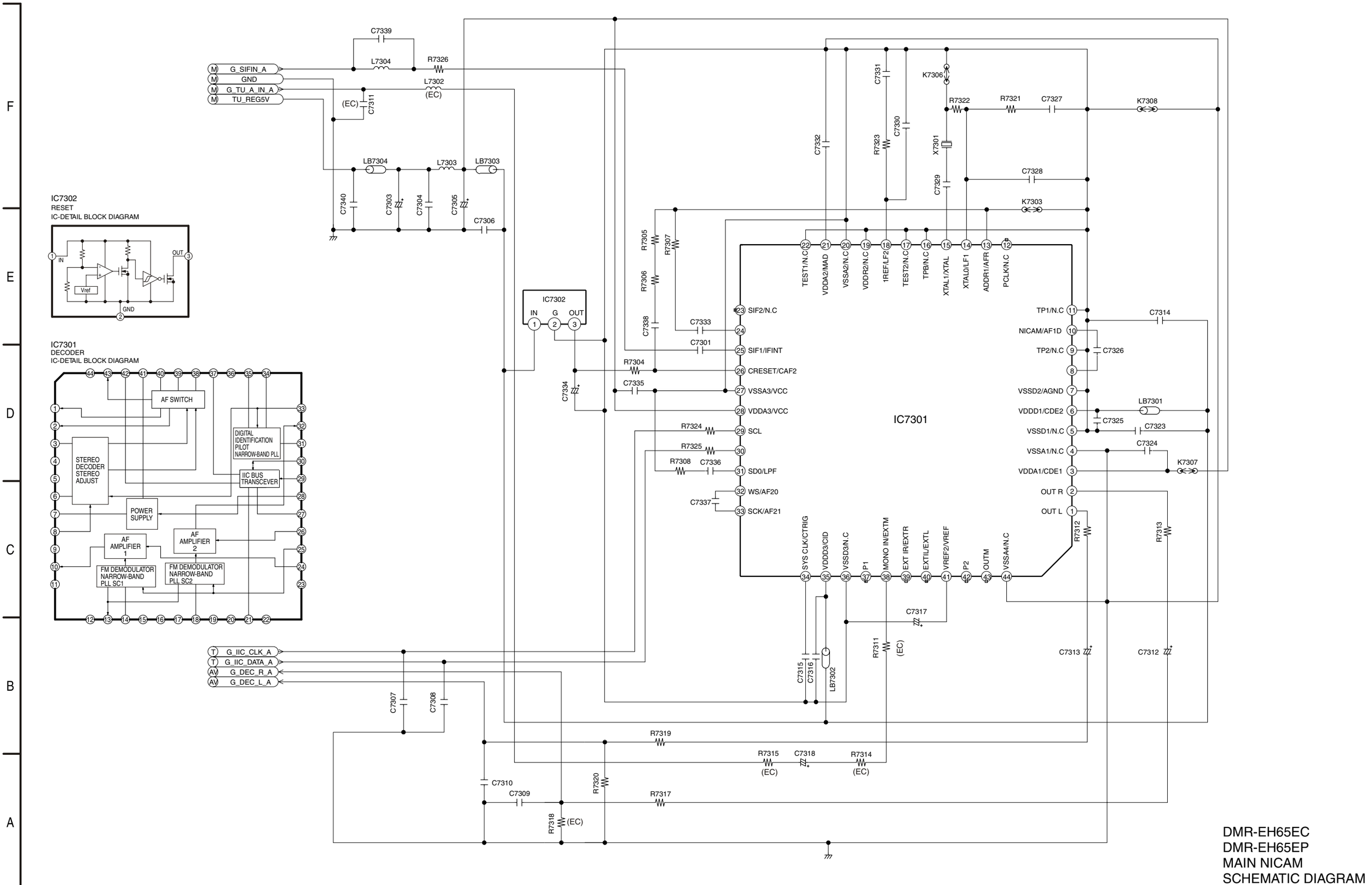

DMR-EH65EC
DMR-EH65EP
MAIN NICAM
SCHEMATIC DIAGRAM

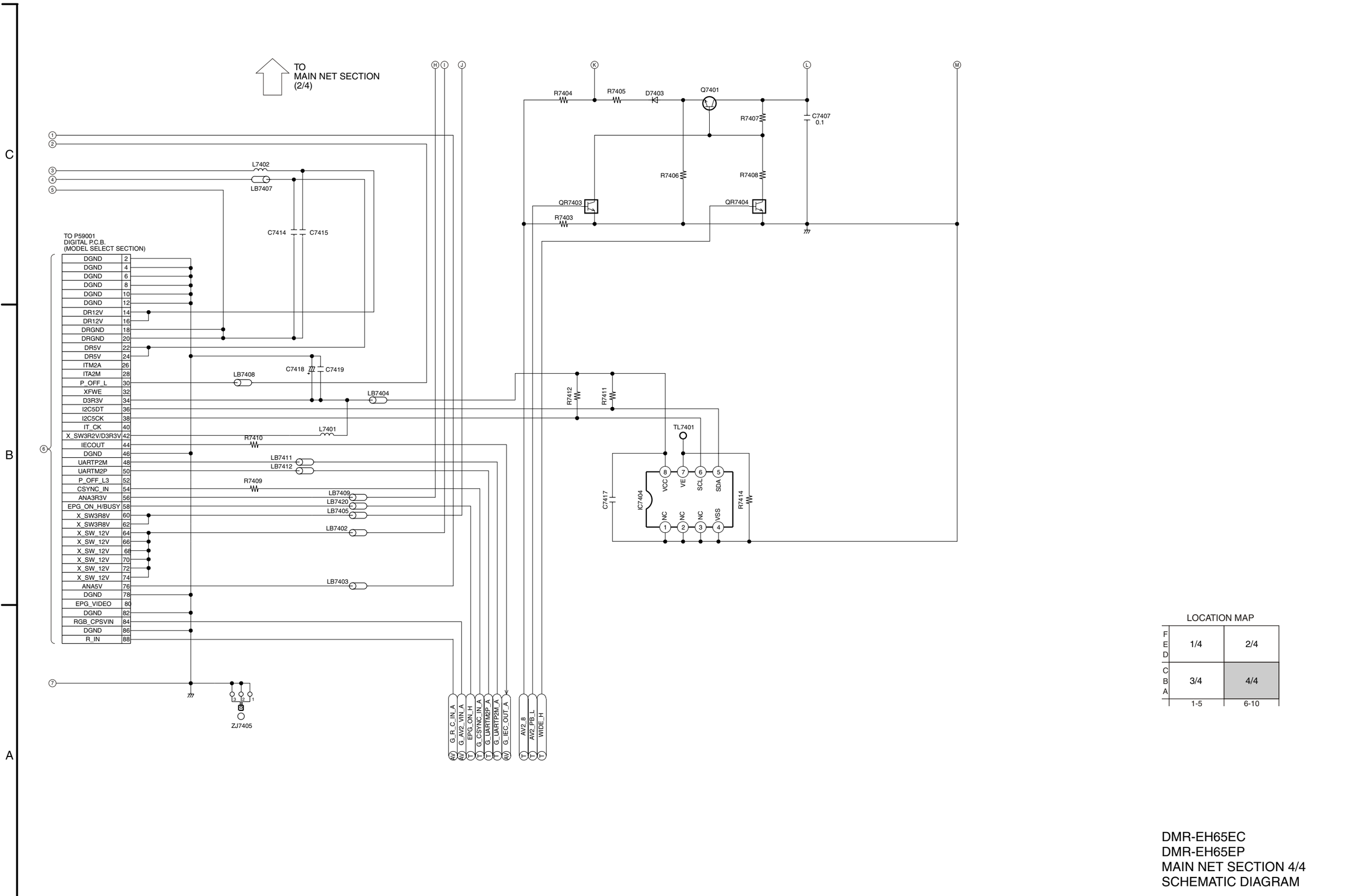

LOCATION MAP

F E D	1/4	2/4
C B A	3/4	4/4
	1-5	6-10

DMR-EH65EC
DMR-EH65EP
MAIN NET SECTION 4/4
SCHEMATIC DIAGRAM

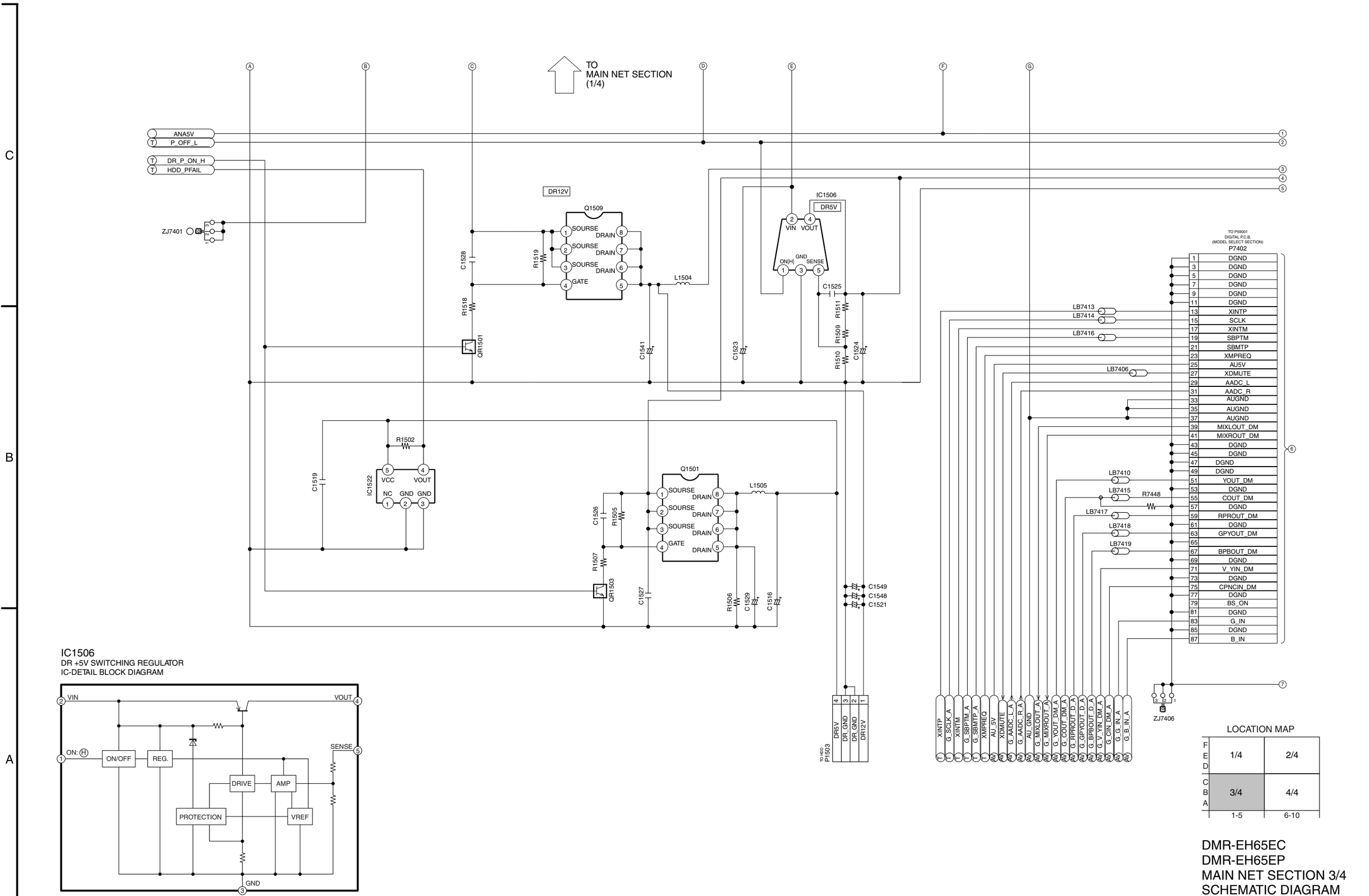

DMR-EH65EC
DMR-EH65EP
MAIN NET SECTION 3/4
SCHEMATIC DIAGRAM

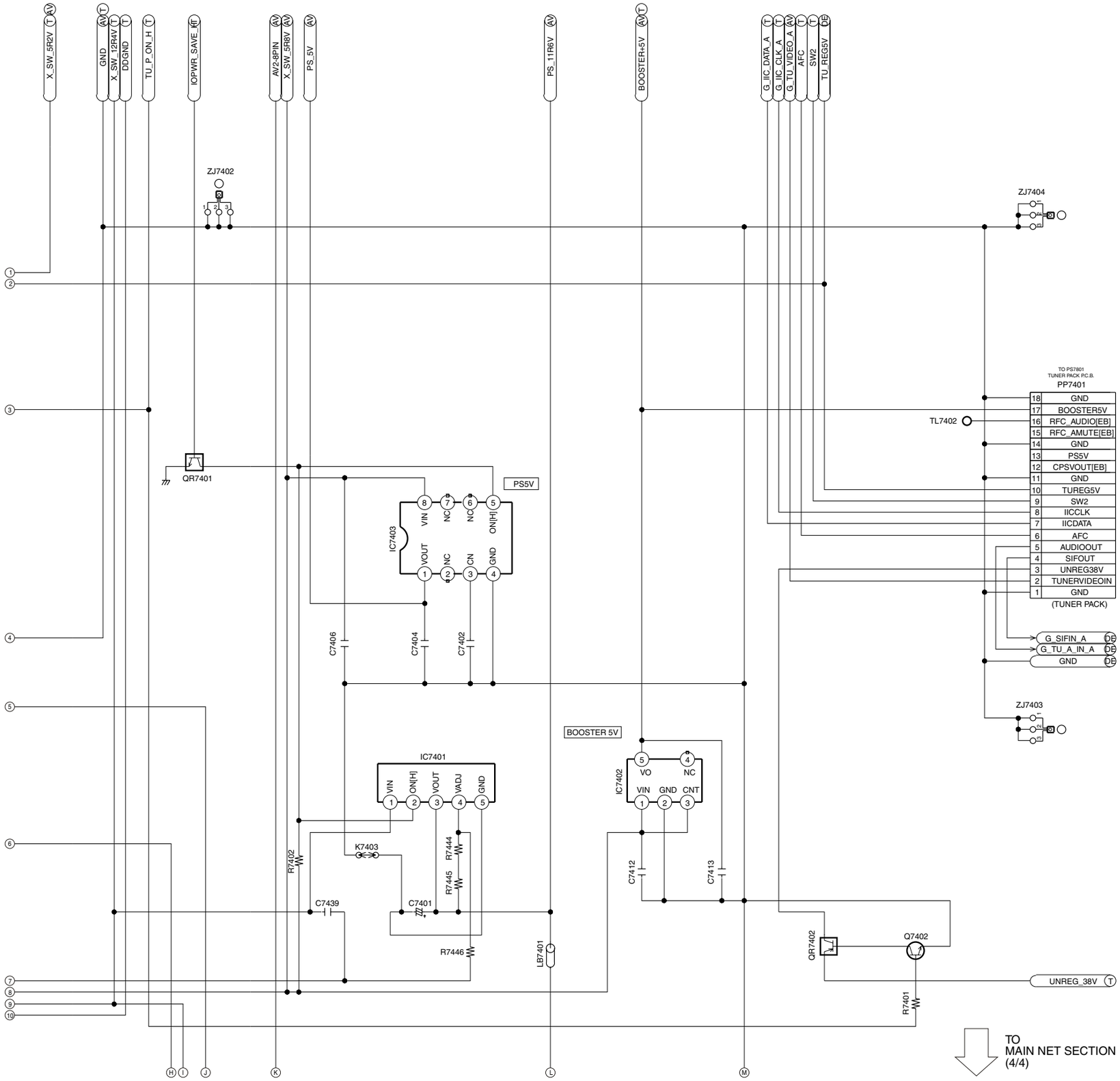

IC7403
PS +5V SWITCHING REGULATOR
IC-DETAIL BLOCK DIAGRAM

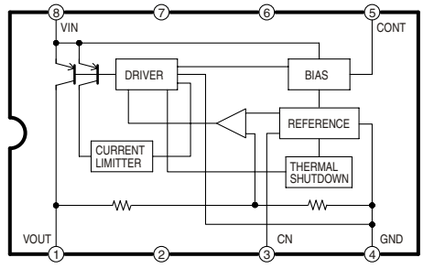

IC7402
BOOSTER +5V SWITCHING REGULATOR
IC-DETAIL BLOCK DIAGRAM

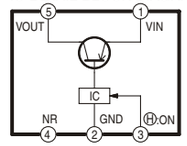

IC7401
PS +11.6V SWITCHING REGULATOR
IC-DETAIL BLOCK DIAGRAM

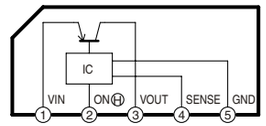

LOCATION MAP

F E D	1/4	2/4
C B A	3/4	4/4
	1-5	6-10

DMR-EH65EC
DMR-EH65EP
MAIN NET SECTION 2/4
SCHEMATIC DIAGRAM

IC1521

ANA +3.3V SWITCHING REGULATOR
IC-DETAIL BLOCK DIAGRAM

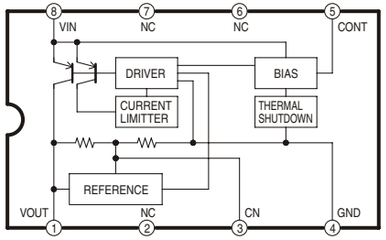

IC1507

XSW +5.2V SWITCHING REGULATOR
IC-DETAIL BLOCK DIAGRAM

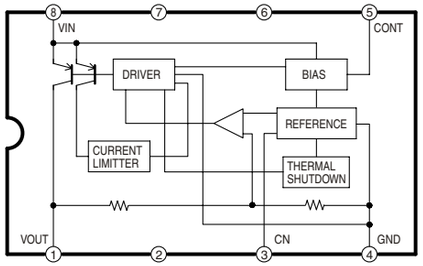

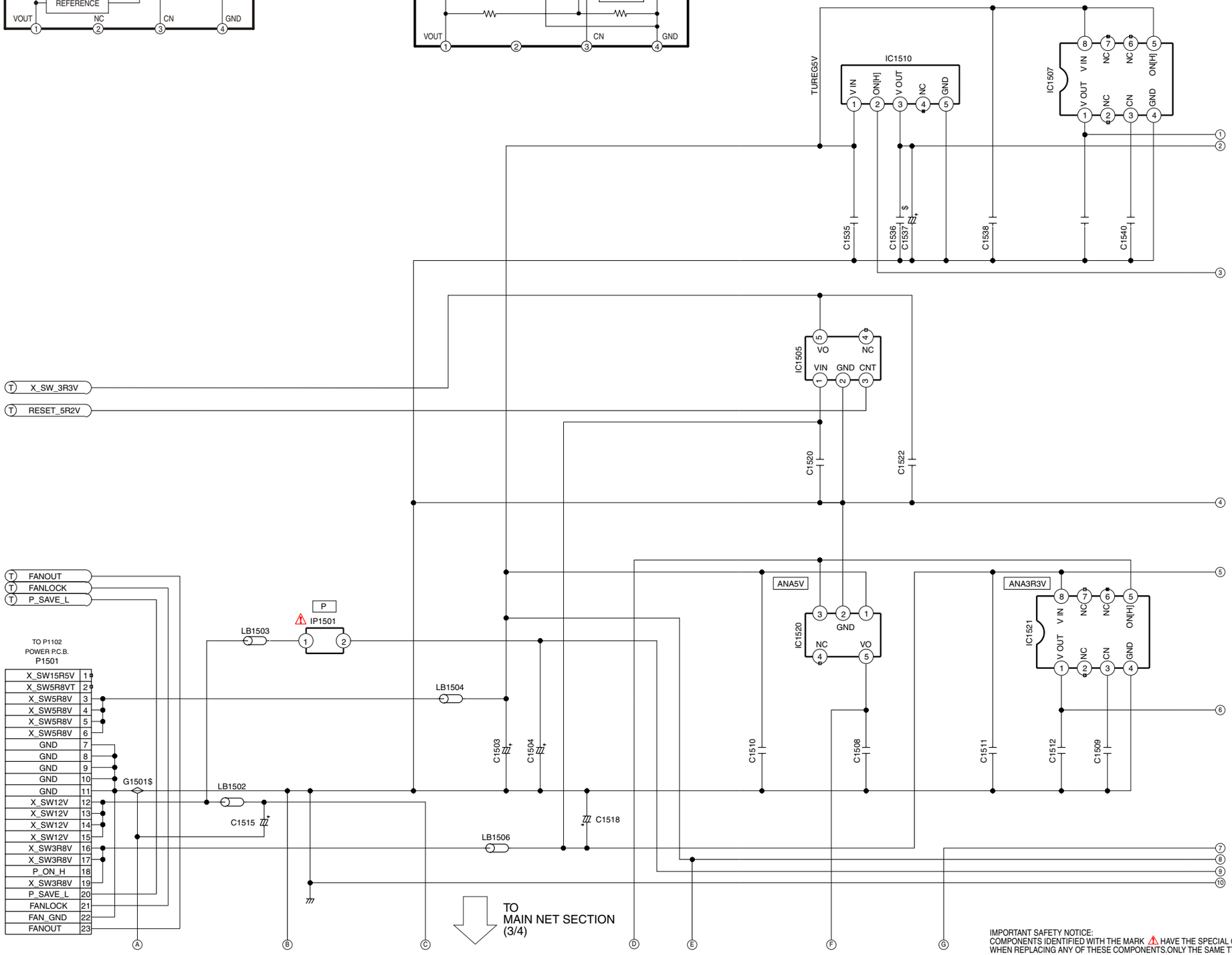

IC1510

TU +5V SWITCHING REGULATOR
IC-DETAIL BLOCK DIAGRAM

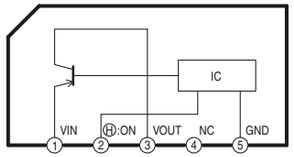

IC1505

XSW +3.3V SWITCHING REGULATOR
IC-DETAIL BLOCK DIAGRAM

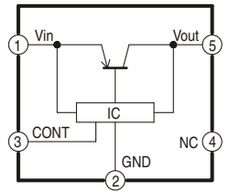

IC1520

ANA +5V SWITCHING REGULATOR
IC-DETAIL BLOCK DIAGRAM

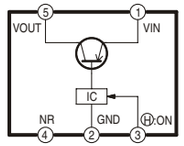

LOCATION MAP

F E D	1/4	2/4
C B A	3/4	4/4
	1-5	6-10

IMPORTANT SAFETY NOTICE:
COMPONENTS IDENTIFIED WITH THE MARK ⚠ HAVE THE SPECIAL CHARACTERISTICS FOR SAFETY.
WHEN REPLACING ANY OF THESE COMPONENTS.ONLY THE SAME TYPE.

DMR-EH65EC
DMR-EH65EP
MAIN NET SECTION 1/4
SCHEMATIC DIAGRAM

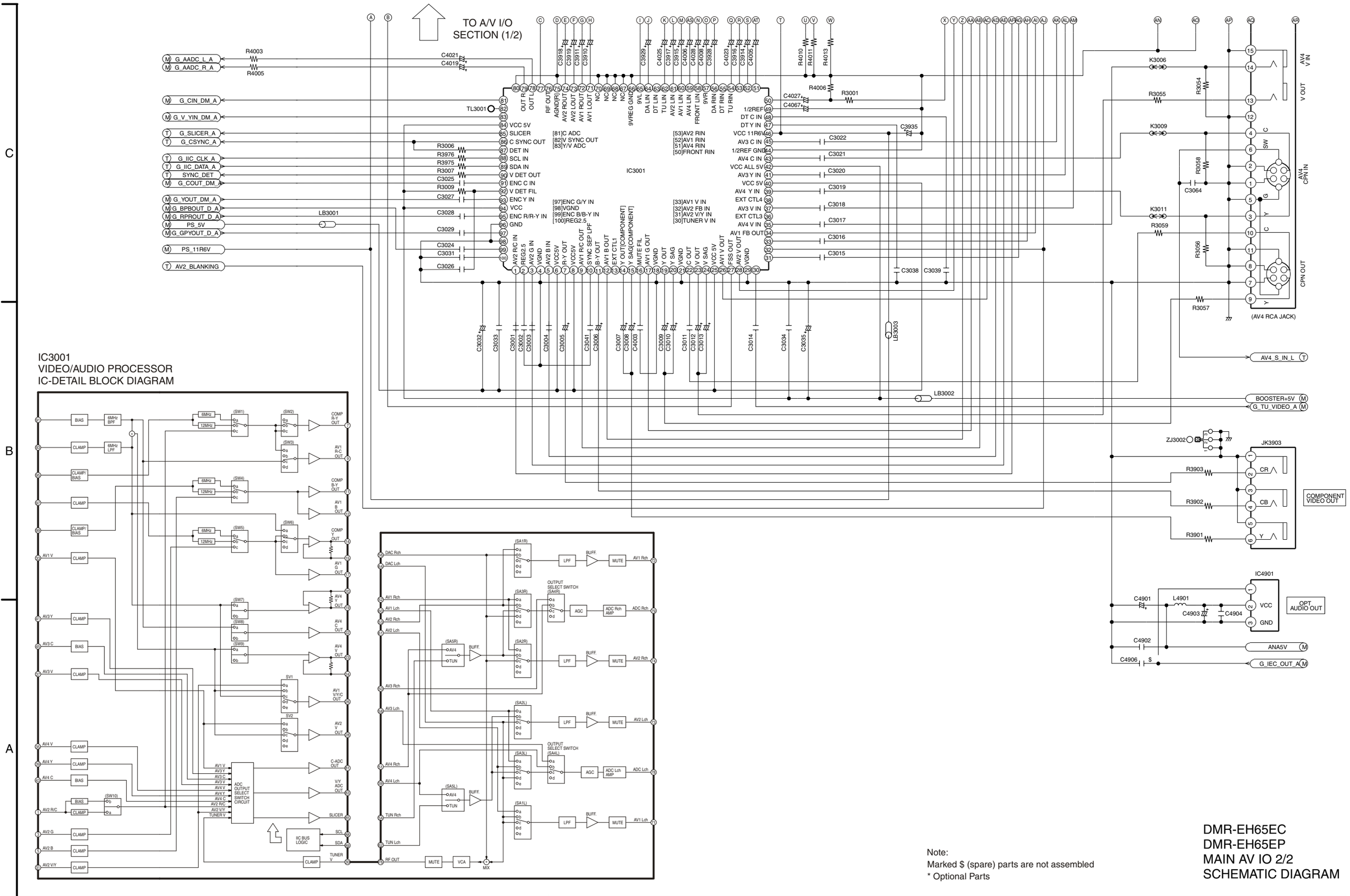

Note:
Marked $ (spare) parts are not assembled
* Optional Parts

DMR-EH65EC
DMR-EH65EP
MAIN AV IO 2/2
SCHEMATIC DIAGRAM

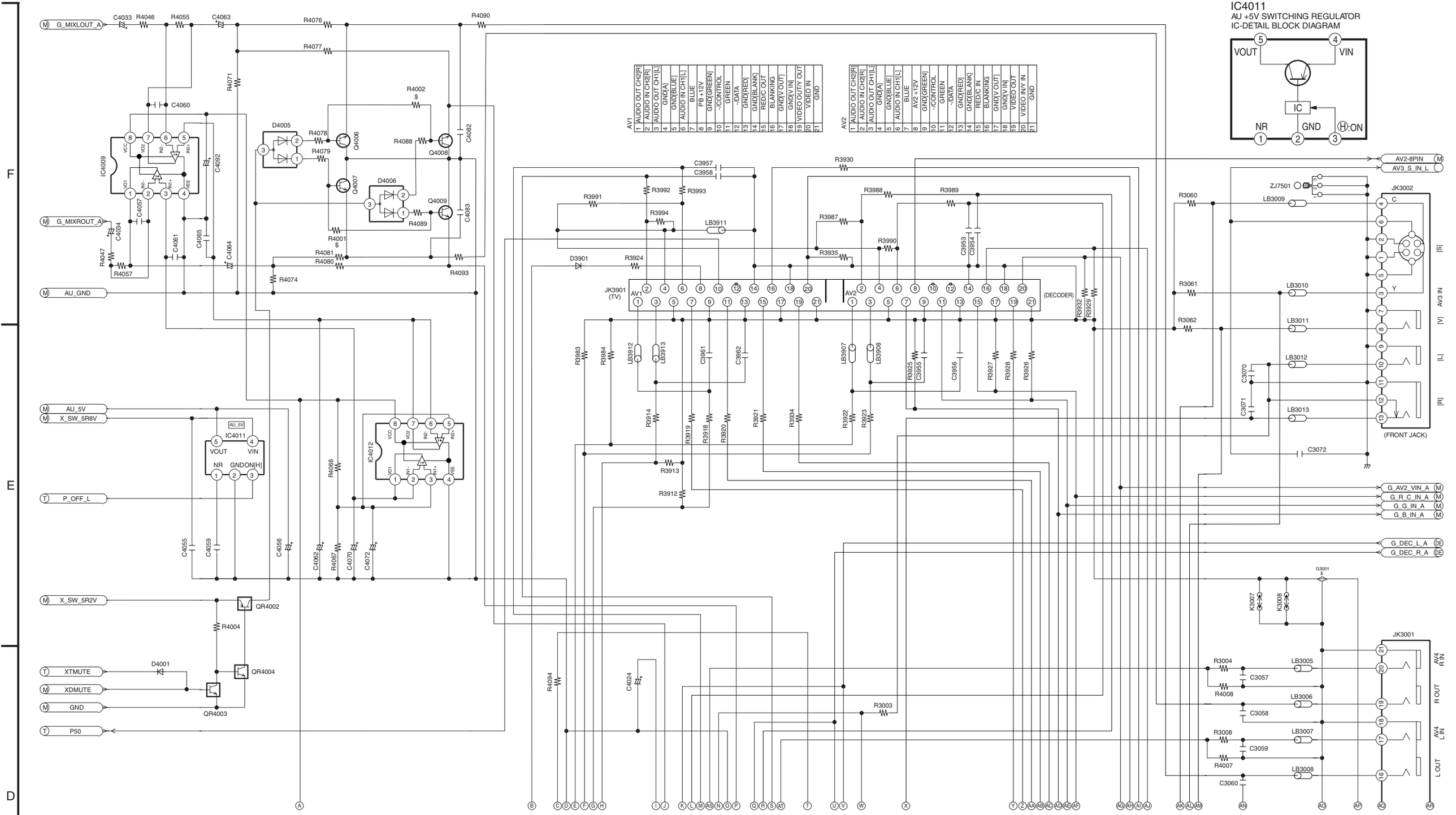

Note:
Marked $ (spare) parts are not assembled
* Optional Parts

DMR-EH65EC
DMR-EH65EP
MAIN AV IO1/2
SCHEMATIC DIAGRAM

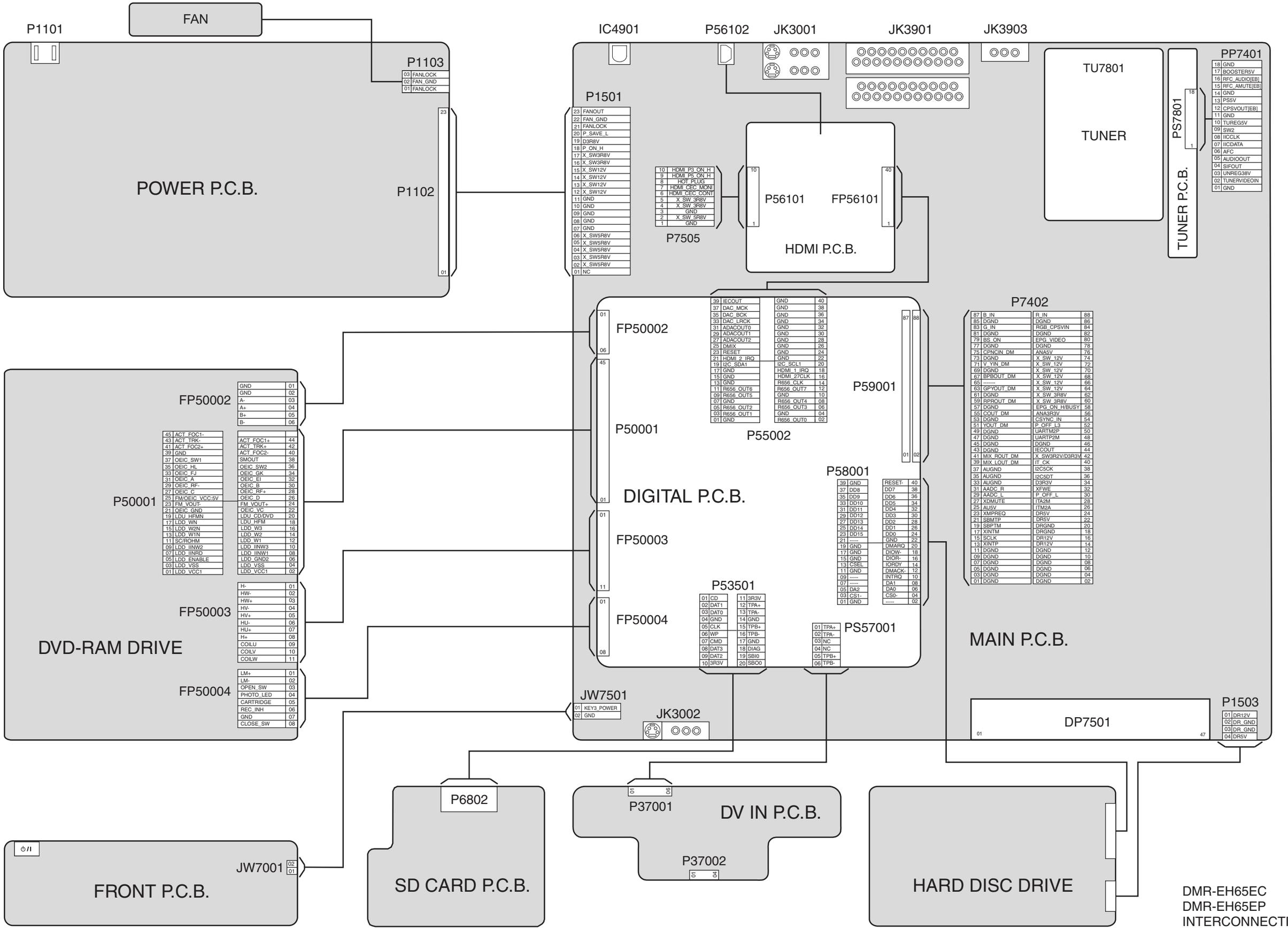

DMR-EH65EC
DMR-EH65EP
INTERCONNECTION DIAGRAM

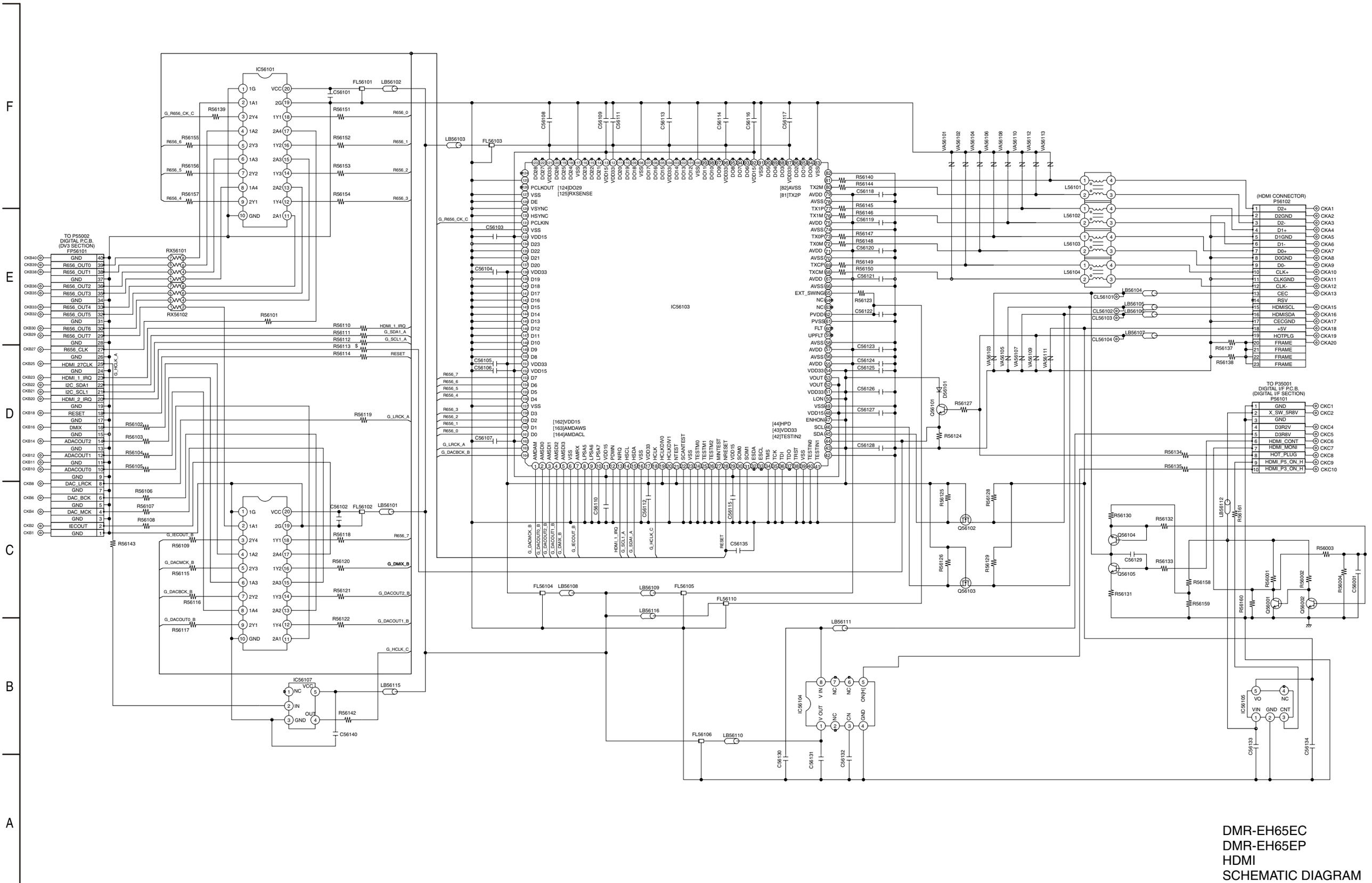

DMR-EH65EC
DMR-EH65EP
HDMI
SCHEMATIC DIAGRAM

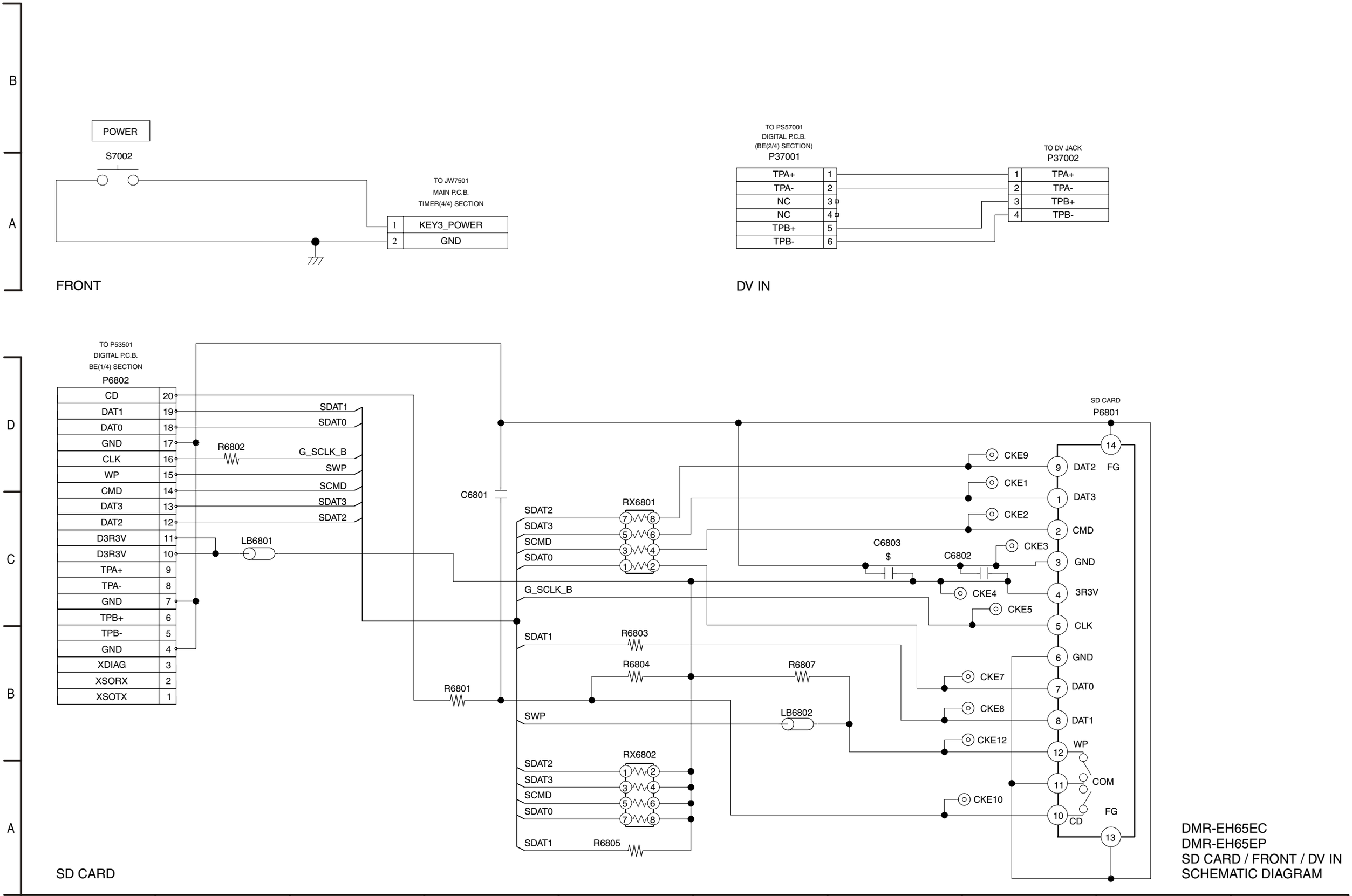

DMR-EH65EC
DMR-EH65EP
SD CARD / FRONT / DV IN
SCHEMATIC DIAGRAM

13 SCHEMATIC DIAGRAM

13.1. INTERCONNECTION DIAGRAM

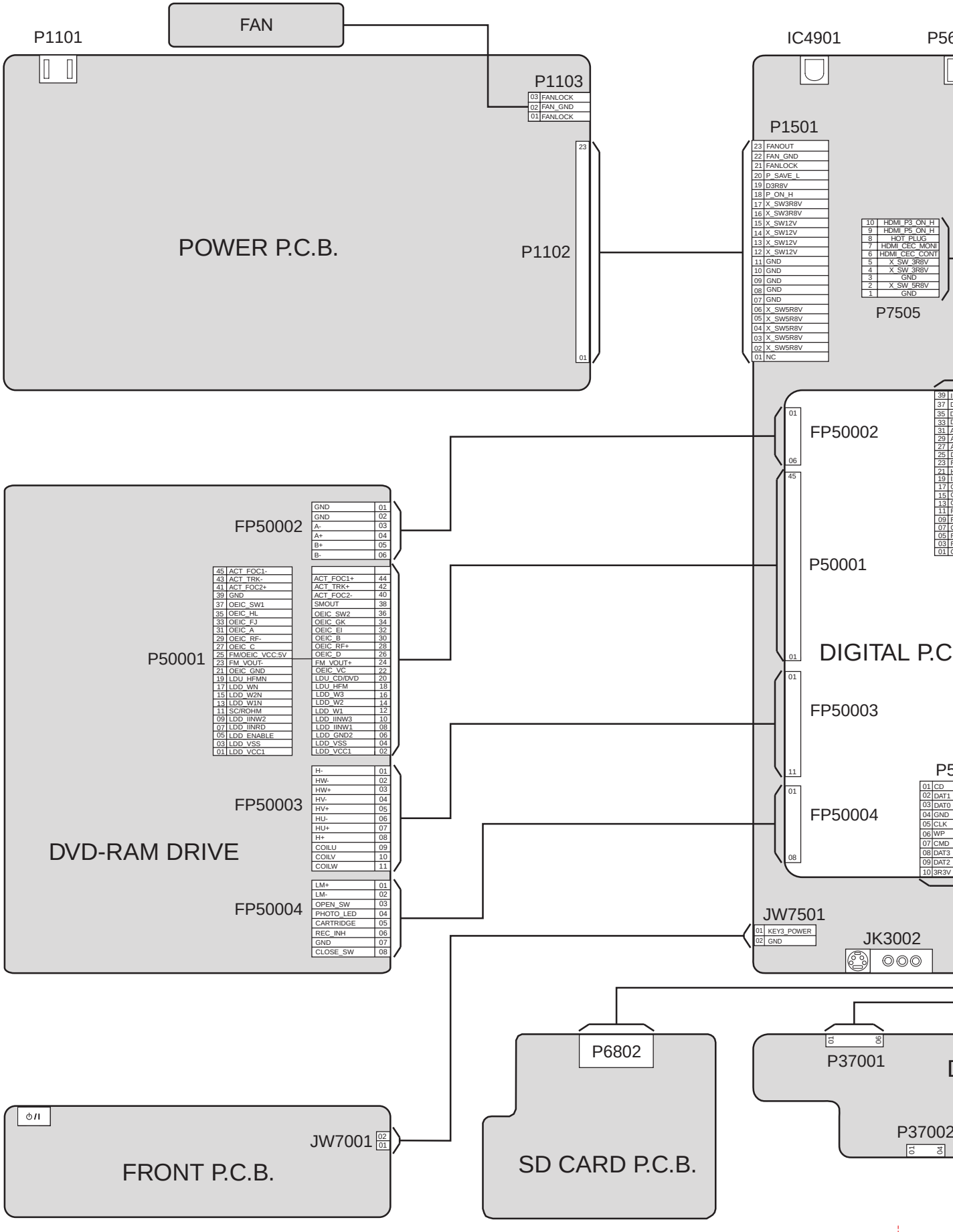

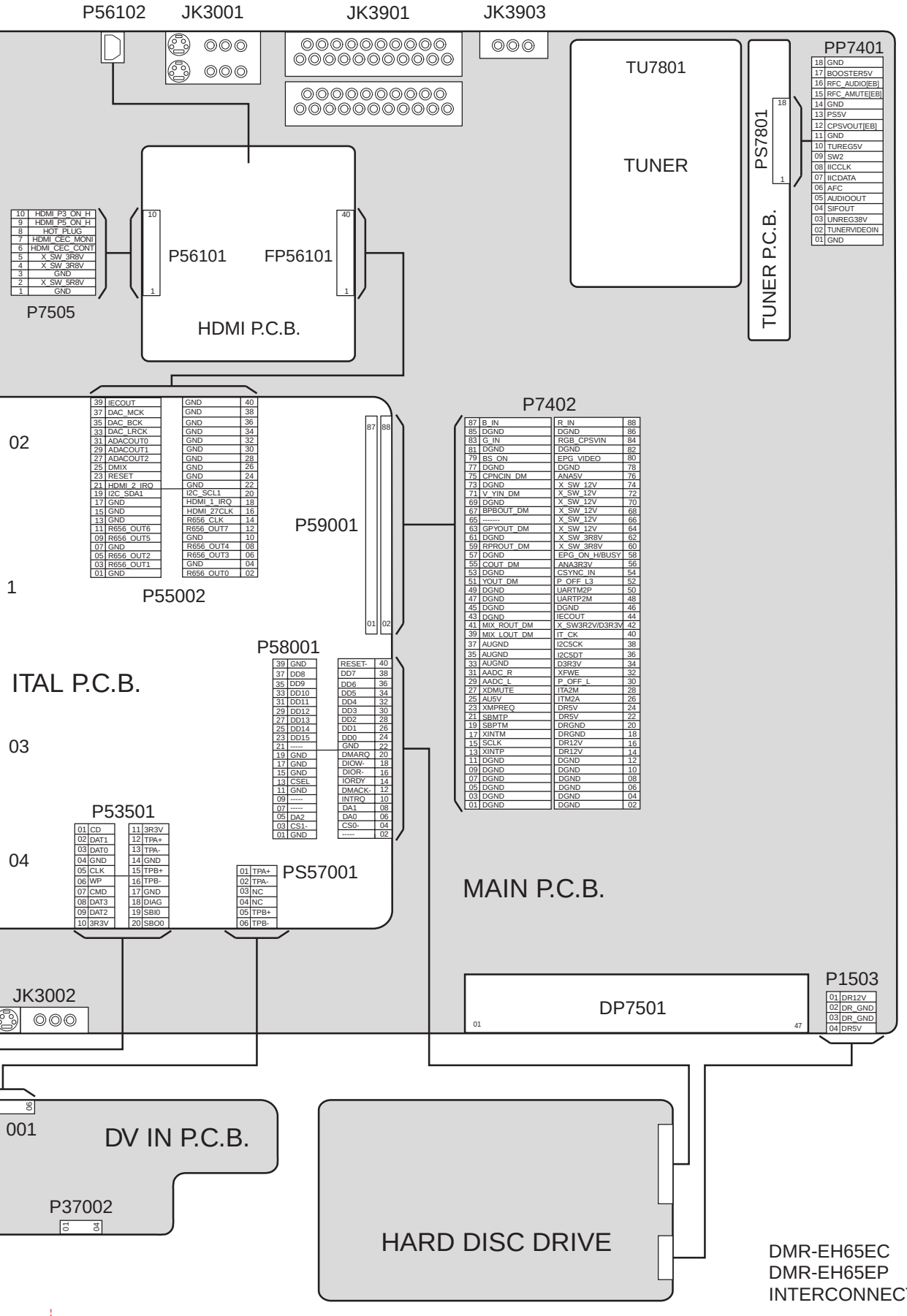

DMR-EH65EC
DMR-EH65EP
INTERCONNECTION DIAGRAM

13.2. POWER

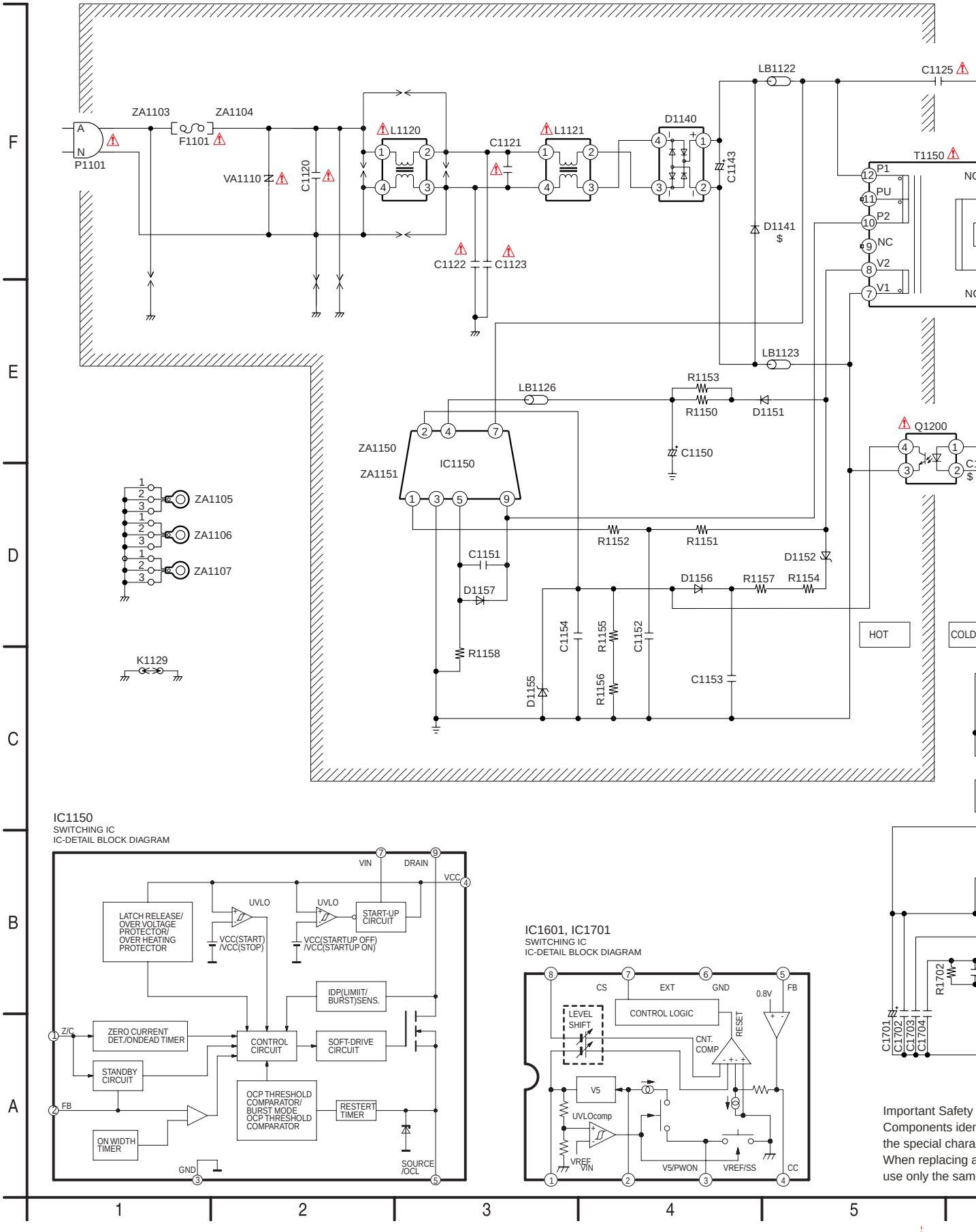
ZA1103
ZA1104
F1101
P1101
VA1110
C1120
L1120
C1121
L1121
D1140
C1143
LB1122
C1125
T1150
P1
PU
P2
NC
V2
V1
D1141
C1122
C1123
LB1123
LB1126
R1153
R1150
D1151
Q1200
ZA1150
ZA1151
IC1150
C1150
ZA1105
ZA1106
ZA1107
R1152
R1151
D1152
C1151
D1156
R1157
R1154
D1157
HOT
COLD
R1158
C1154
R1155
C1152
C1153
D1155
R1156
K1129
IC1150
SWITCHING IC
IC-DETAIL BLOCK DIAGRAM
VIN
DRAIN
VCC
LATCH RELEASE/ OVER VOLTAGE PROTECTOR/ OVER HEATING PROTECTOR
UVLO
VCC(START) /VCC(STOP)
VCC(STARTUP OFF) /VCC(STARTUP ON)
START-UP CIRCUIT
IDP(LIMIIT/ BURST)SENS.
Z/C
ZERO CURRENT DET./ONDEAD TIMER
CONTROL CIRCUIT
SOFT-DRIVE CIRCUIT
STANDBY CIRCUIT
FB
OCP THRESHOLD COMPARATOR/ BURST MODE OCP THRESHOLD COMPARATOR
RESTERT TIMER
ON WIDTH TIMER
GND
SOURCE /OCL
IC1601, IC1701
SWITCHING IC
IC-DETAIL BLOCK DIAGRAM
CS
EXT
GND
FB
0.8V
LEVEL SHIFT
CONTROL LOGIC
RESET
CNT. COMP
V5
UVLOcomp
VREF
VIN
V5/PWON
VREF/SS
CC
R1702
C1701
C1702
C1703
C1704
Important Safety
Components iden
the special chara
When replacing a
use only the sam

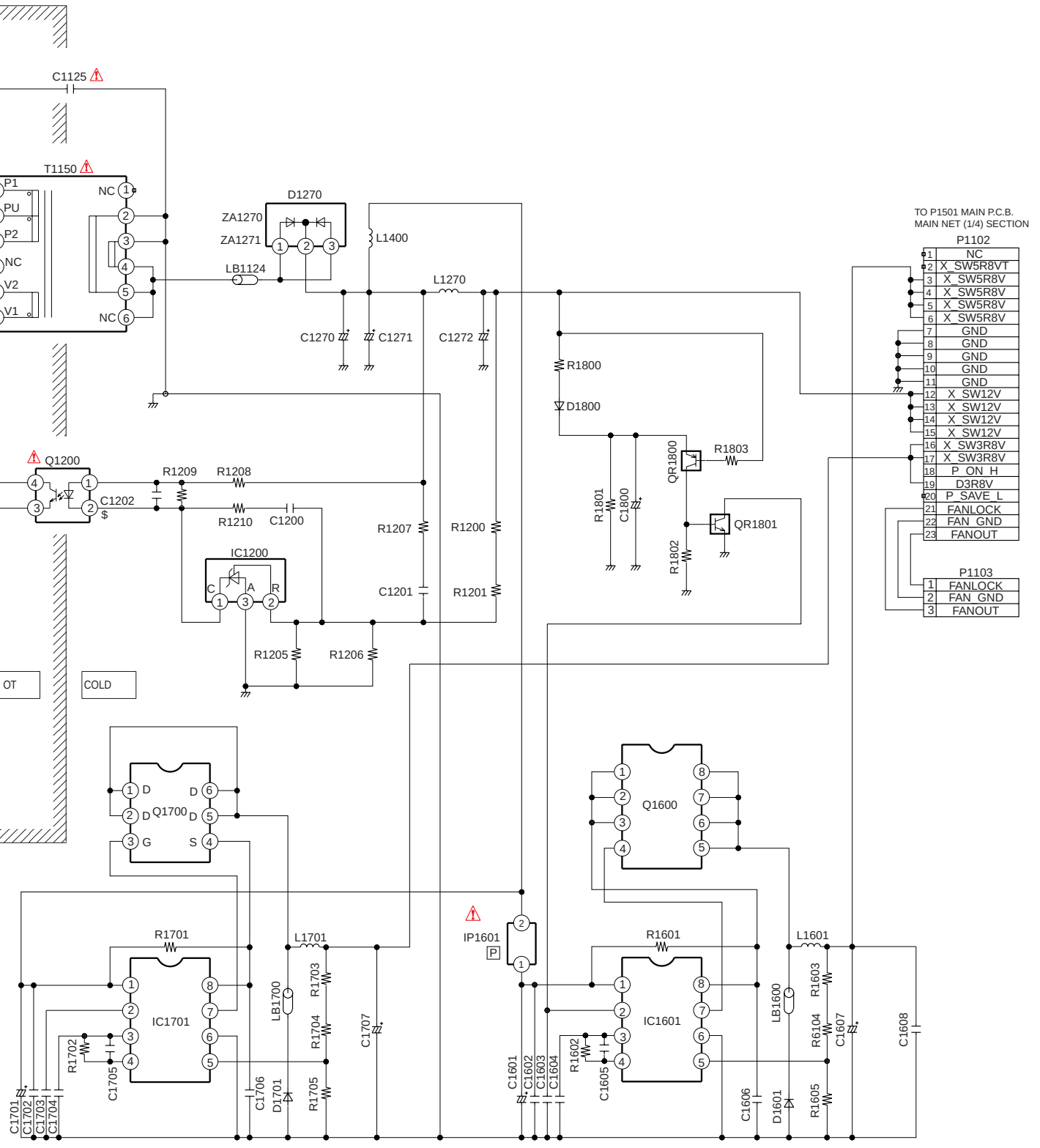

Important Safety Notice: ⚠
Components identified with the mark have the special characteristics for safety.
When replacing any of these components use only the same type.

Note:
Marked $ (spare) parts are not assembled
* Optional Parts

DMR-EH65EC
DMR-EH65EP
POWER
SCHEMATIC DIAGRAM

13.3. MAIN NET

IC1521

ANA +3.3V SWITCHING REGULATOR
IC-DETAIL BLOCK DIAGRAM

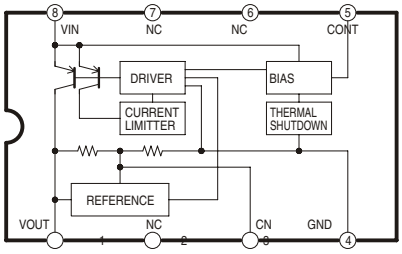

IC1507

XSW +5.2V SWITCHING REGULATOR
IC-DETAIL BLOCK DIAGRAM

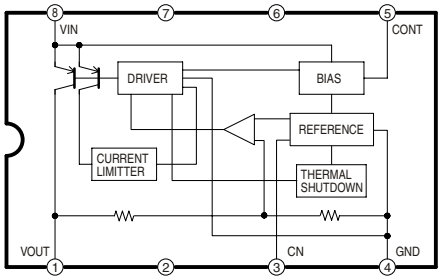

F

E

D

X_SW_3R3V

RESET_5R2V

FANOUT

FANLOCK

P_SAVE_L

TO P1102
POWER P.C.B.
P1501

X_SW15R5V	1
X_SW5R8VT	2
X_SW5R8V	3
X_SW5R8V	4
X_SW5R8V	5
X_SW5R8V	6
GND	7
GND	8
GND	9
GND	10
GND	11
X_SW12V	12
X_SW12V	13
X_SW12V	14
X_SW12V	15
X_SW3R8V	16
X_SW3R8V	17
P_ON_H	18
X_SW3R8V	19
P_SAVE_L	20
FANLOCK	21
FAN_GND	22
FANOUT	23

G1501$

LB1503

P

IP1501

LB1504

LB1502

C1515

C1503

C1504

C1518

LB1506

C1510

IC1505

ANA5V

IC1520

TO
MAIN NET SECTION
(3/4)

A B C D E

1 2

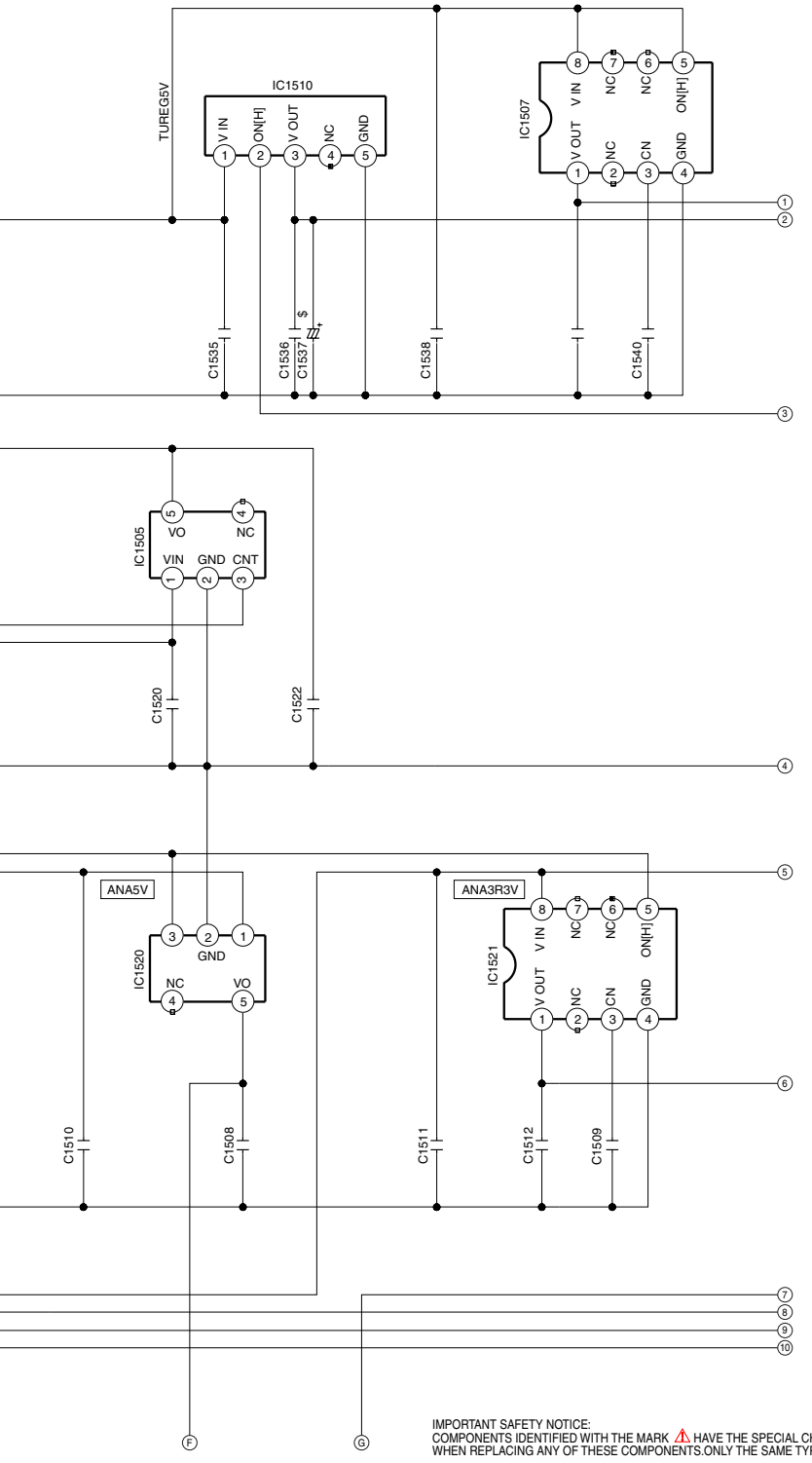

IC1510

TU +5V SWITCHING REGULATOR
IC-DETAIL BLOCK DIAGRAM

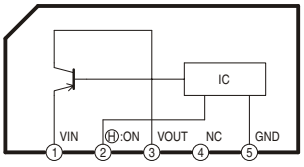

IC1505

XSW +3.3V SWITCHING REGULATOR
IC-DETAIL BLOCK DIAGRAM

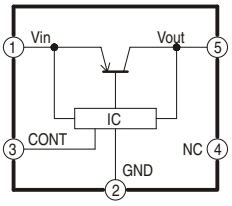

IC1520

ANA +5V SWITCHING REGULATOR
IC-DETAIL BLOCK DIAGRAM

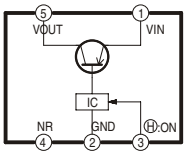

LOCATION MAP

F E D	1/4	2/4
C B A	3/4	4/4
	1-5	6-10

IMPORTANT SAFETY NOTICE:
COMPONENTS IDENTIFIED WITH THE MARK ⚠ HAVE THE SPECIAL CHARACTERISTICS FOR SAFETY.
WHEN REPLACING ANY OF THESE COMPONENTS.ONLY THE SAME TYPE.

DMR-EH65EC
DMR-EH65EP
MAIN NET SECTION 1/4
SCHEMATIC DIAGRAM

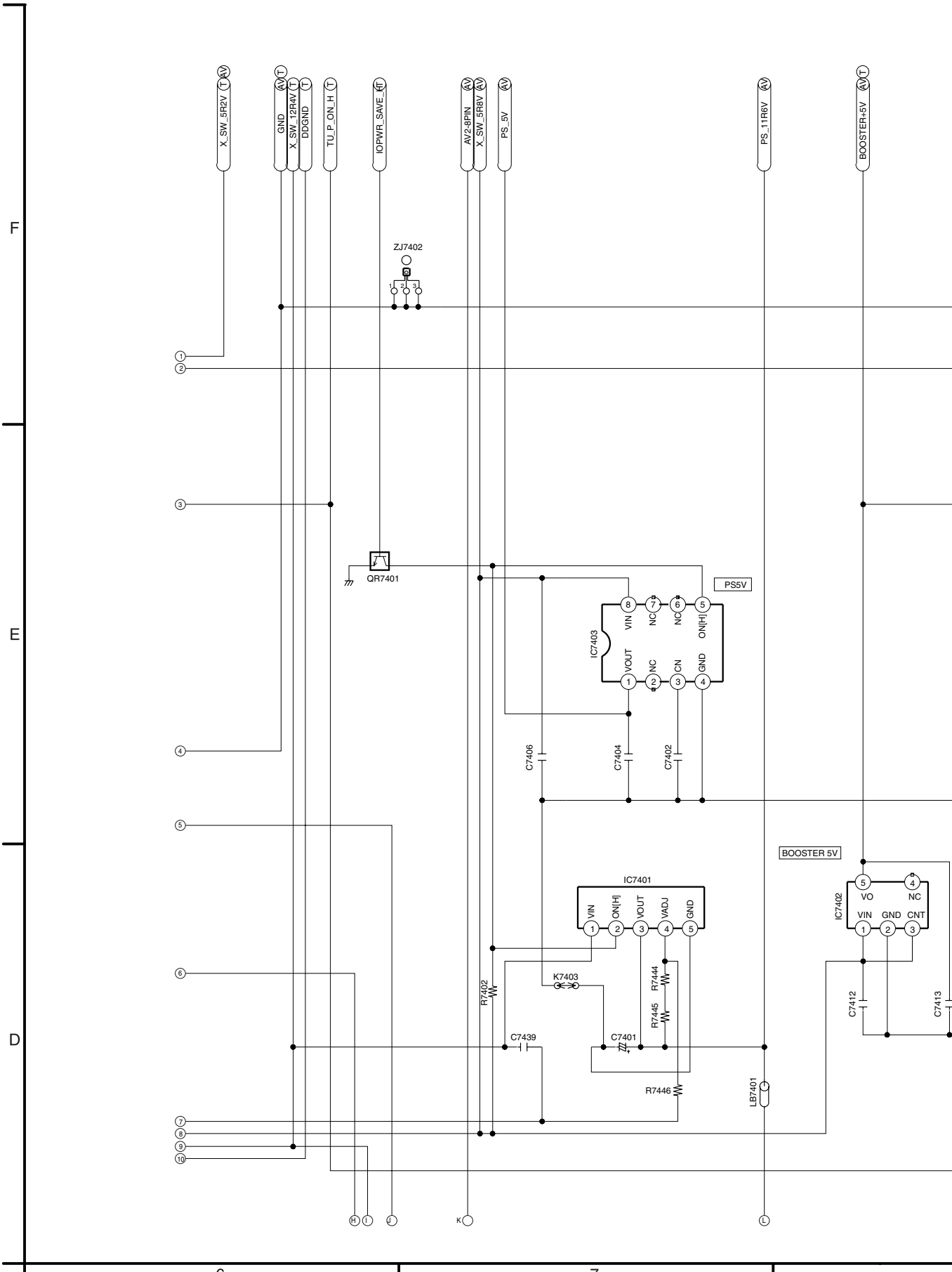
X_SW_5R2V
GND
X_SW_12R4V
DDGND
TU_P_ON_H
IOPWR_SAVE_HT
AV2-8PIN
X_SW_5R8V
PS_5V
PS_11R6V
BOOSTER+5V
ZJ7402
QR7401
PS5V
IC7403
VIN
NC
NC
ON[H]
VOUT
NC
CN
GND
C7406
C7404
C7402
BOOSTER 5V
IC7401
VIN
ON[H]
VOUT
VADJ
GND
IC7402
VO
NC
VIN
GND
CNT
K7403
R7402
R7444
R7445
C7439
C7401
R7446
LB7401
C7412
C7413
F
E
D
6
7

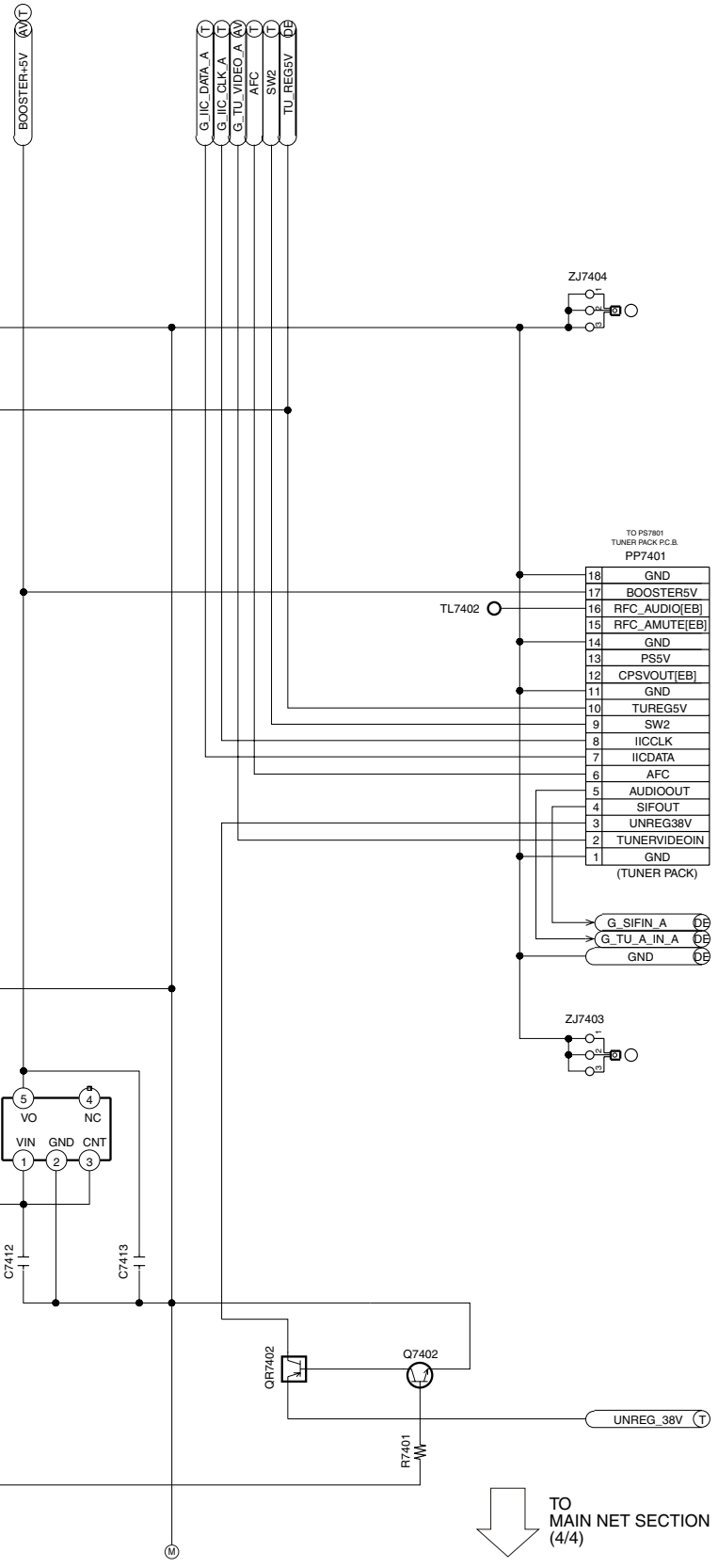

IC7403
PS +5V SWITCHING REGULATOR
IC-DETAIL BLOCK DIAGRAM

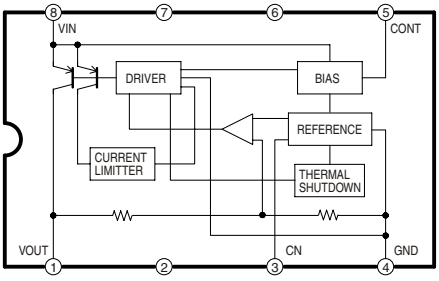

IC7402
BOOSTER +5V SWITCHING REGULATOR
IC-DETAIL BLOCK DIAGRAM

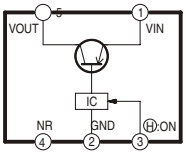

IC7401
PS +11.6V SWITCHING REGULATOR
IC-DETAIL BLOCK DIAGRAM

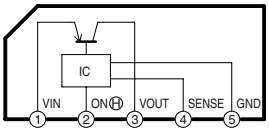

LOCATION MAP

F E D	1/4	2/4
C B A	3/4	4/4
	1-5	6-10

DMR-EH65EC
DMR-EH65EP
MAIN NET SECTION 2/4
SCHEMATIC DIAGRAM

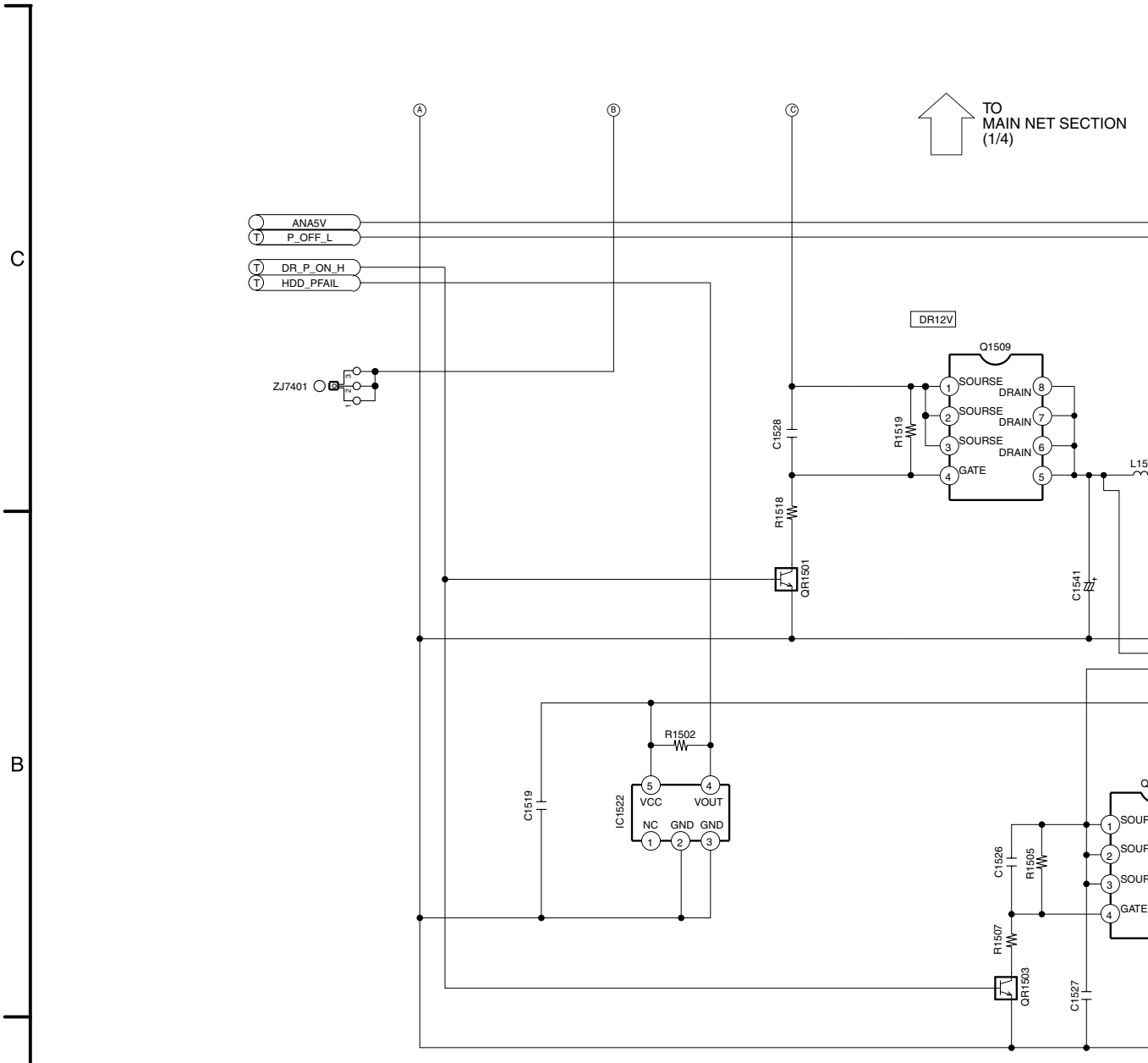

IC1506
DR +5V SWITCHING REGULATOR
IC-DETAIL BLOCK DIAGRAM

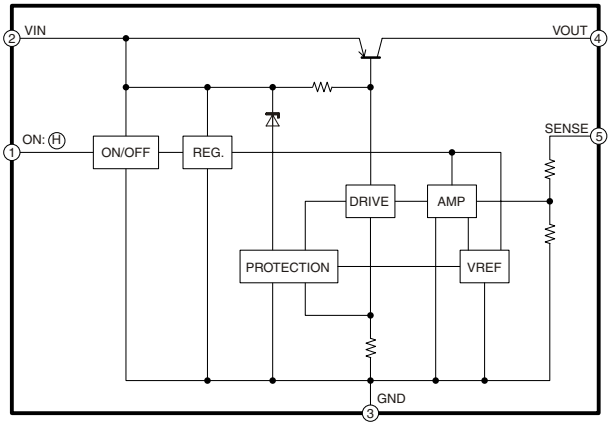

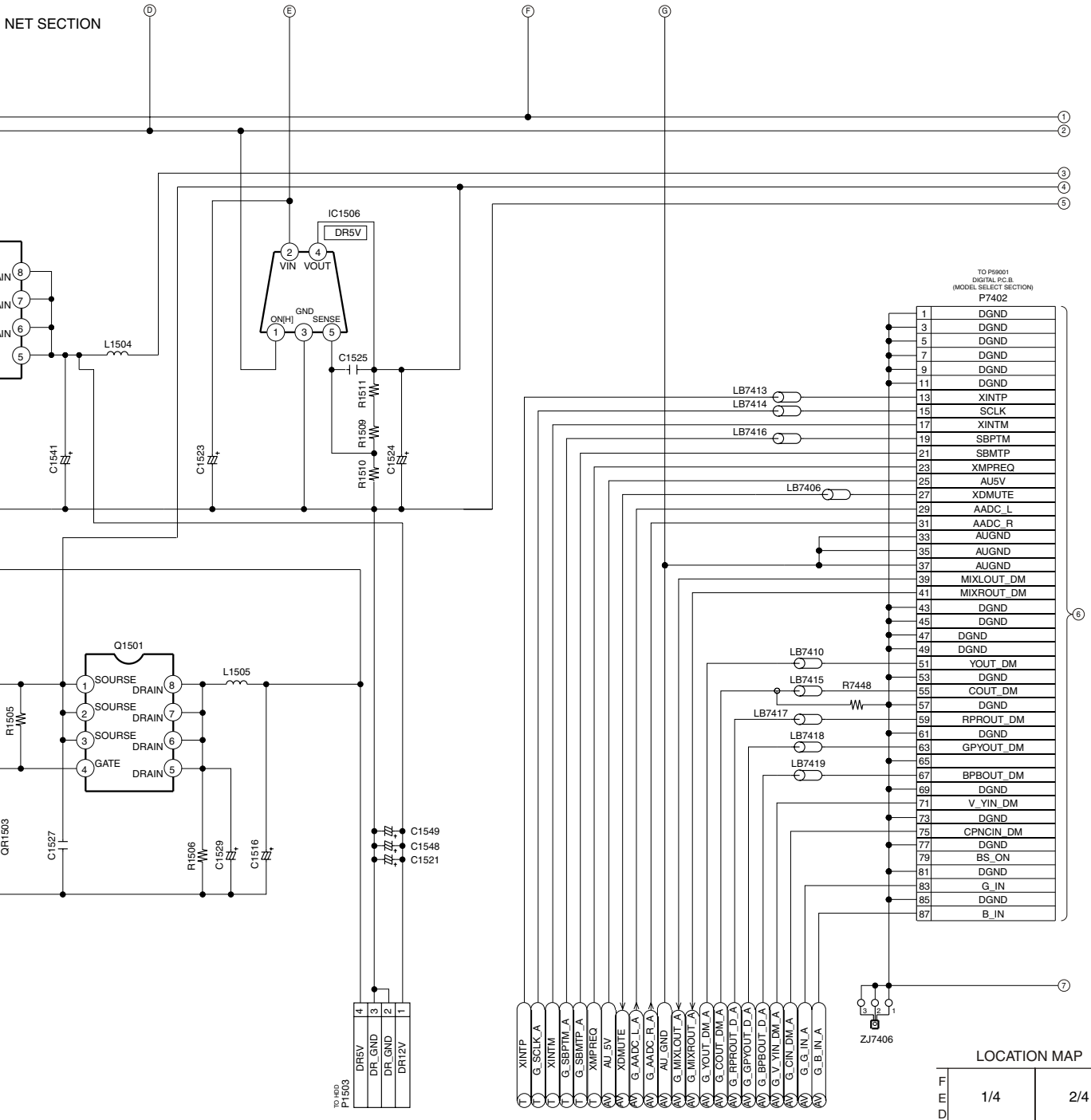

LOCATION MAP

F E D	1/4	2/4
C B A	3/4	4/4
	1-5	6-10

DMR-EH65EC
DMR-EH65EP
MAIN NET SECTION 3/4
SCHEMATIC DIAGRAM

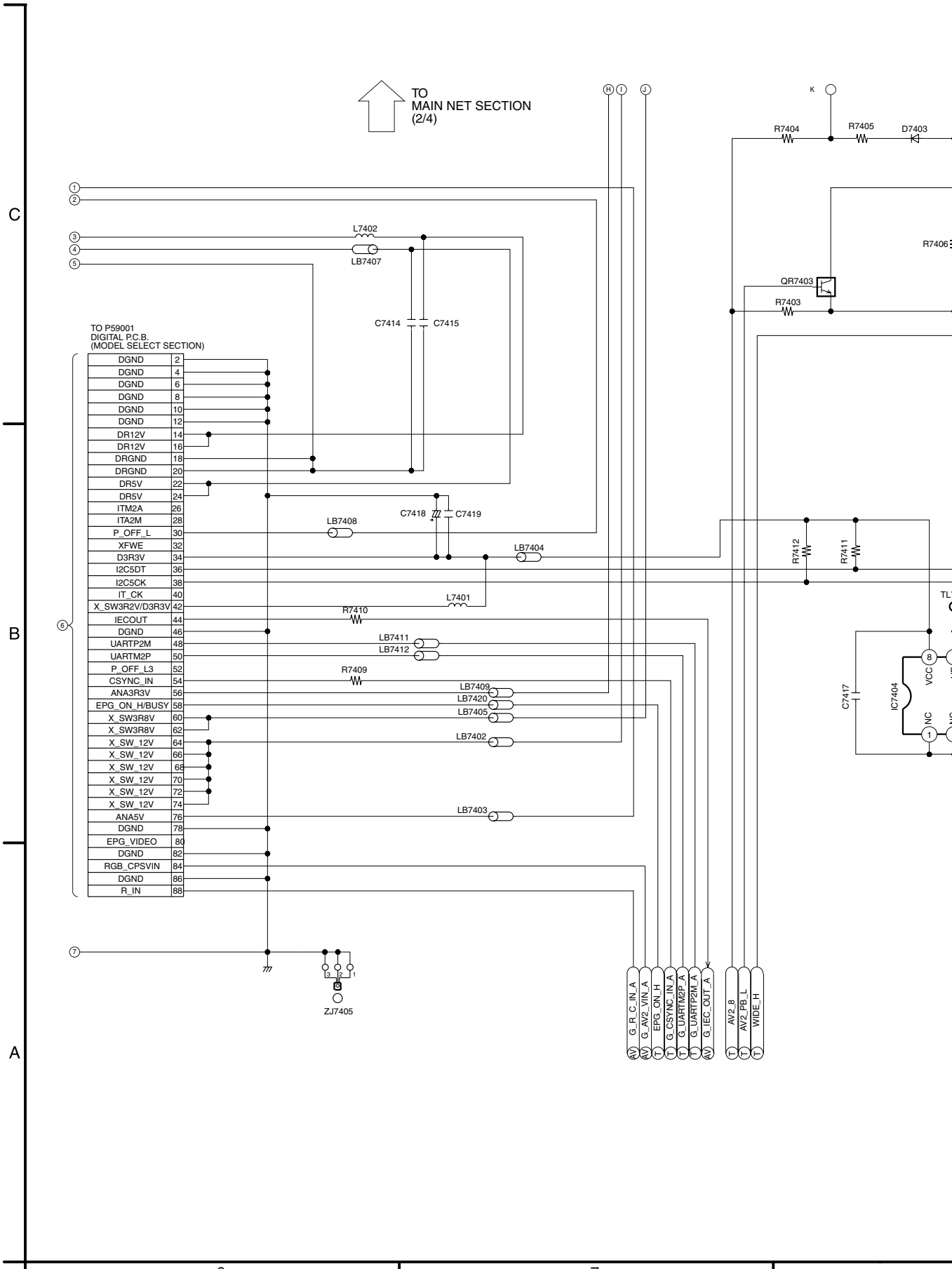
TO
MAIN NET SECTION
(2/4)
TO P59001
DIGITAL P.C.B.
(MODEL SELECT SECTION)
DGND 2
DGND 4
DGND 6
DGND 8
DGND 10
DGND 12
DR12V 14
DR12V 16
DRGND 18
DRGND 20
DR5V 22
DR5V 24
ITM2A 26
ITA2M 28
P_OFF_L 30
XFWE 32
D3R3V 34
I2C5DT 36
I2C5CK 38
IT_CK 40
X_SW3R2V/D3R3V 42
IECOUT 44
DGND 46
UARTP2M 48
UARTM2P 50
P_OFF_L3 52
CSYNC_IN 54
ANA3R3V 56
EPG_ON_H/BUSY 58
X_SW3R8V 60
X_SW3R8V 62
X_SW_12V 64
X_SW_12V 66
X_SW_12V 68
X_SW_12V 70
X_SW_12V 72
X_SW_12V 74
ANA5V 76
DGND 78
EPG_VIDEO 80
DGND 82
RGB_CPSVIN 84
DGND 86
R_IN 88
L7402
LB7407
C7414
C7415
C7418
C7419
LB7408
LB7404
L7401
R7410
LB7411
LB7412
R7409
LB7409
LB7420
LB7405
LB7402
LB7403
ZJ7405
R7404
R7405
D7403
R7406
QR7403
R7403
R7412
R7411
C7417
IC7404
VCC
NC
G_R_C_IN_A
G_AV2_VIN_A
EPG_ON_H
G_CSYNC_IN_A
G_UARTM2P_A
G_UARTP2M_A
G_IEC_OUT_A
AV2_8
AV2_PB_L
WIDE_H

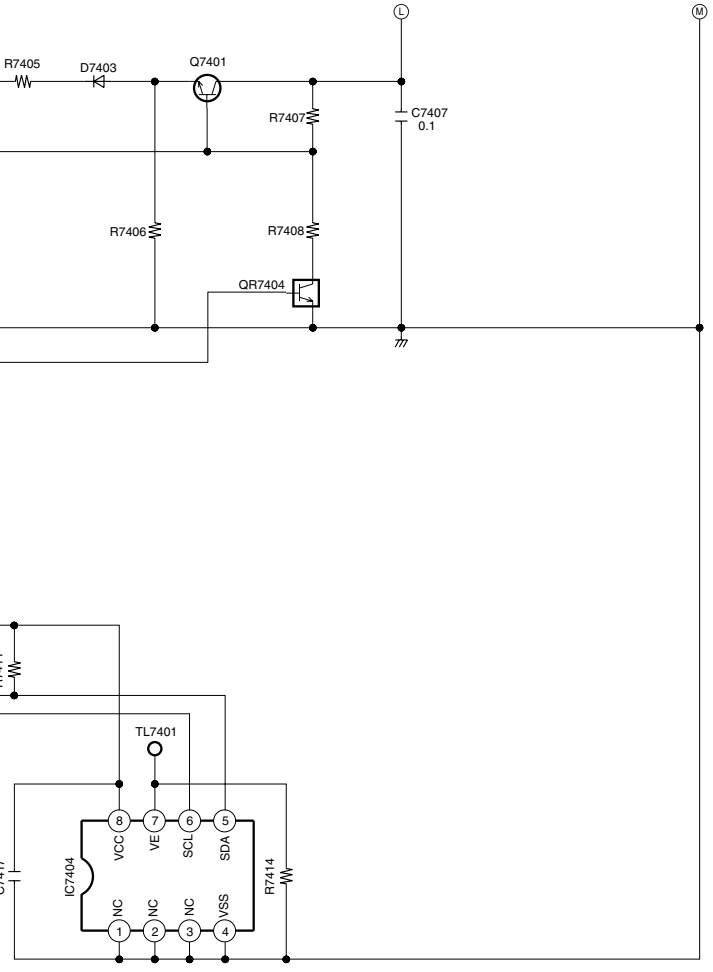

LOCATION MAP

F E D	1/4	2/4
C B A	3/4	4/4
	1-5	6-10

DMR-EH65EC
DMR-EH65EP
MAIN NET SECTION 4/4
SCHEMATIC DIAGRAM

13.4. MAIN AV IO

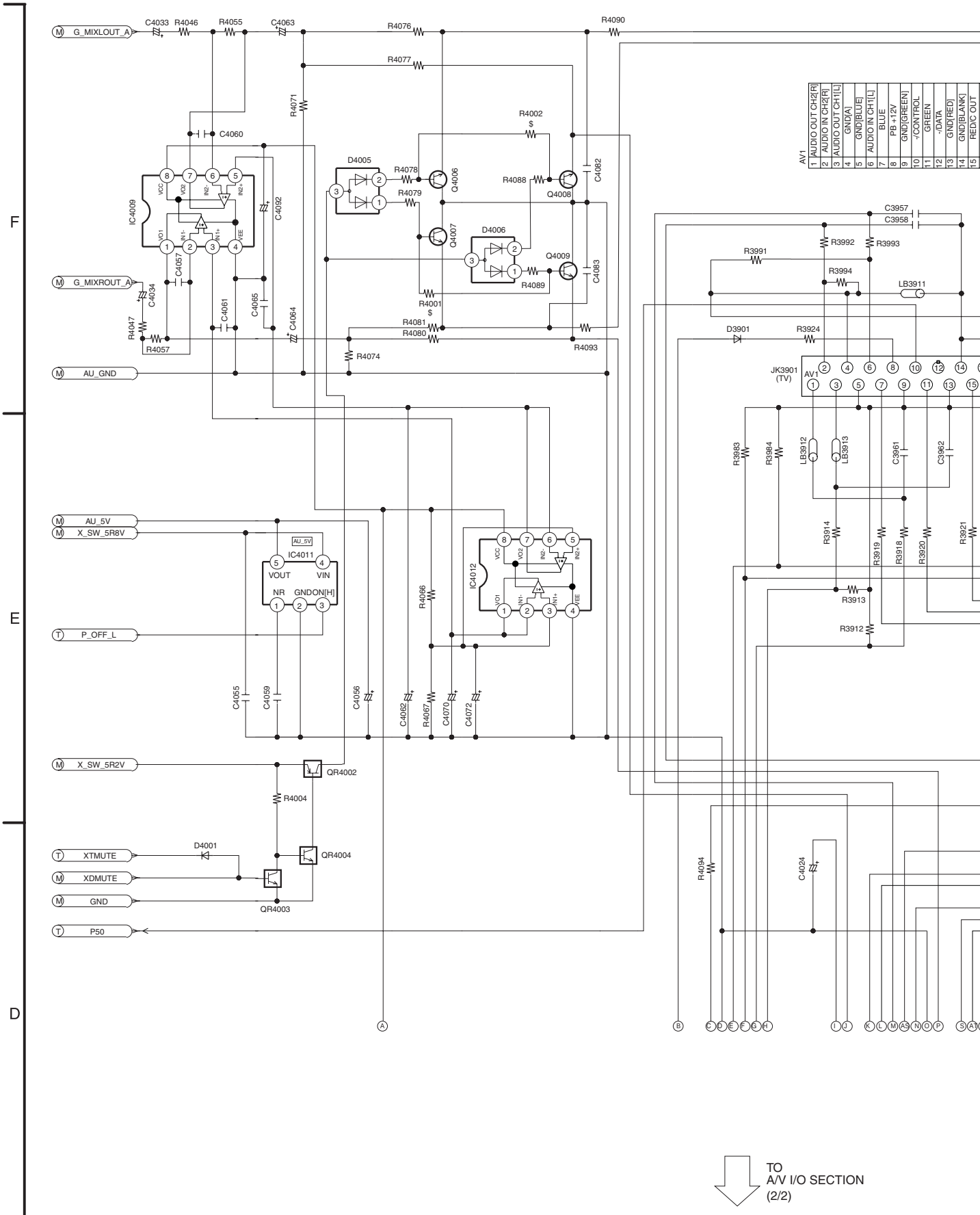

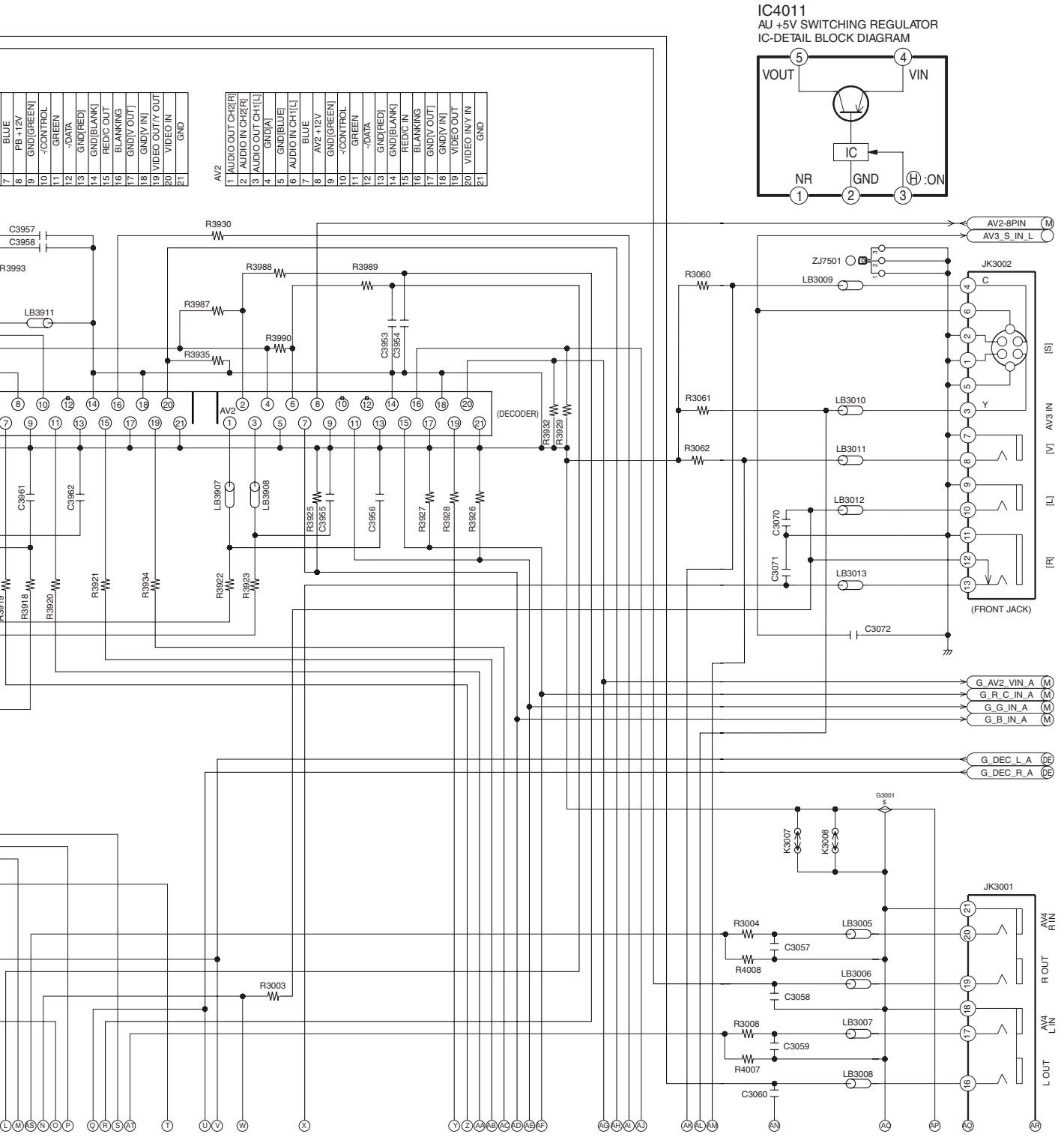

Note:
Marked $ (spare) parts are not assembled
* Optional Parts

DMR-EH65EC
DMR-EH65EP
MAIN AV IO1/2
SCHEMATIC DIAGRAM

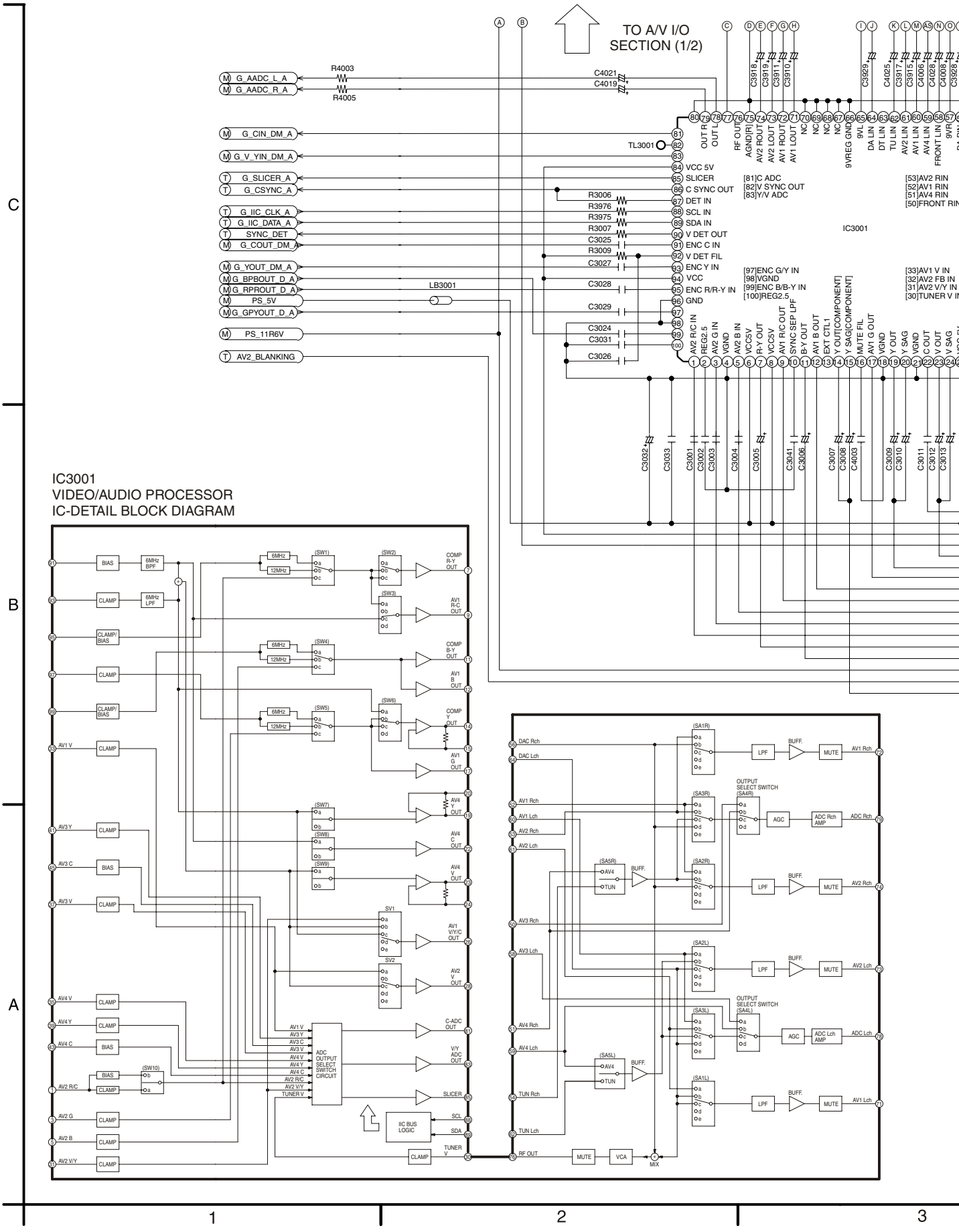
TO A/V I/O SECTION (1/2)
IC3001
VIDEO/AUDIO PROCESSOR
IC-DETAIL BLOCK DIAGRAM
G_AADC_L_A
G_AADC_R_A
G_CIN_DM_A
G_V_YIN_DM_A
G_SLICER_A
G_CSYNC_A
G_IIC_CLK_A
G_IIC_DATA_A
SYNC_DET
G_COUT_DM_A
G_YOUT_DM_A
G_BPBOUT_D_A
G_RPROUT_D_A
PS_5V
G_GPYOUT_D_A
PS_11R6V
AV2_BLANKING
R4003
R4005
C4021
C4019
TL3001
LB3001
VCC 5V
SLICER
C SYNC OUT
DET IN
SCL IN
SDA IN
V DET OUT
ENC C IN
V DET FIL
ENC Y IN
VCC
ENC R/R-Y IN
GND
[81]C ADC
[82]V SYNC OUT
[83]Y/V ADC
[97]ENC G/Y IN
[98]VGND
[99]ENC B/B-Y IN
[100]REG2.5
[53]AV2 RIN
[52]AV1 RIN
[51]AV4 RIN
[50]FRONT RIN
[33]AV1 V IN
[32]AV2 FB IN
[31]AV2 V/Y IN
[30]TUNER V IN
BIAS
CLAMP
CLAMP/BIAS
6MHz BPF
6MHz LPF
6MHz
12MHz
COMP R-Y OUT
AV1 R-C OUT
COMP B-Y OUT
AV1 B OUT
COMP Y OUT
AV1 G OUT
AV4 Y OUT
AV4 C OUT
AV4 V OUT
AV1 V/Y/C OUT
AV2 V OUT
C-ADC OUT
V/Y ADC OUT
SLICER
SCL
SDA
TUNER V
ADC OUTPUT SELECT SWITCH CIRCUIT
IIC BUS LOGIC
DAC Rch
DAC Lch
AV1 Rch
AV1 Lch
AV2 Rch
AV2 Lch
AV3 Rch
AV3 Lch
AV4 Rch
AV4 Lch
TUN Rch
TUN Lch
RF OUT
LPF
BUFF.
MUTE
AGC
ADC Rch AMP
ADC Lch AMP
OUTPUT SELECT SWITCH
VCA
MIX
AV1 Rch
AV2 Rch
AV2 Lch
AV1 Lch
ADC Rch
ADC Lch

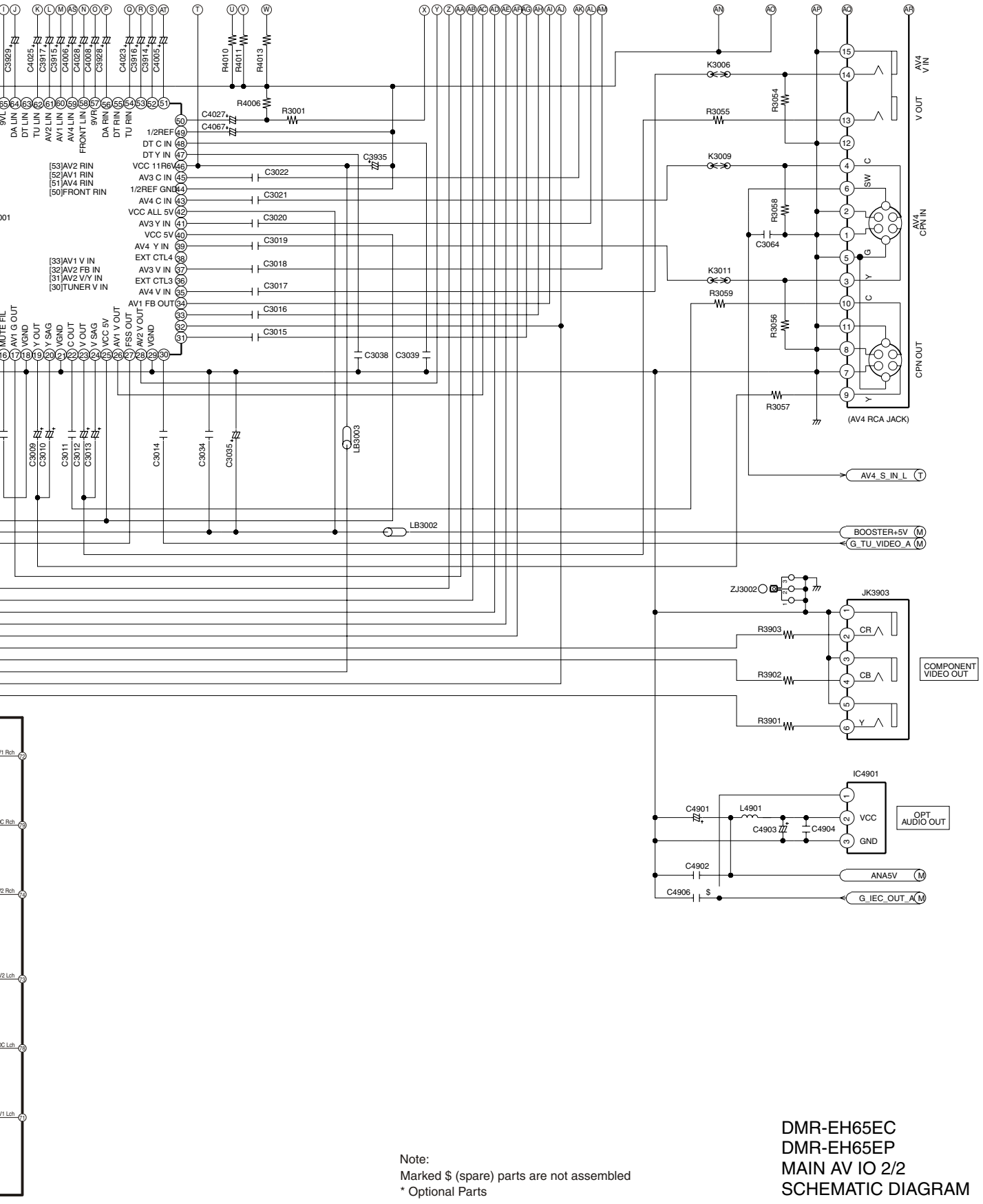

Note:
Marked $ (spare) parts are not assembled
* Optional Parts

DMR-EH65EC
DMR-EH65EP
MAIN AV IO 2/2
SCHEMATIC DIAGRAM

13.5. MAIN TIMER

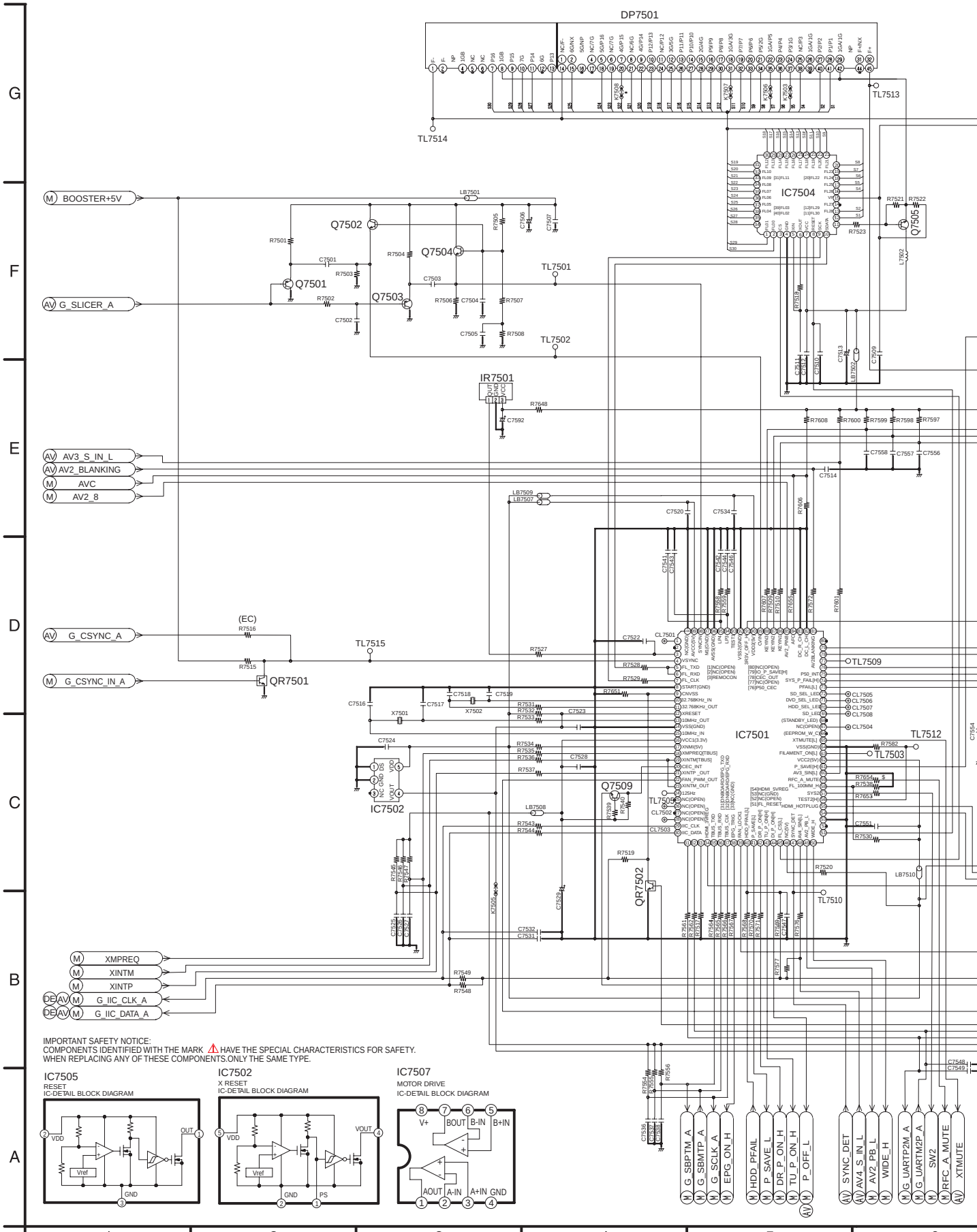

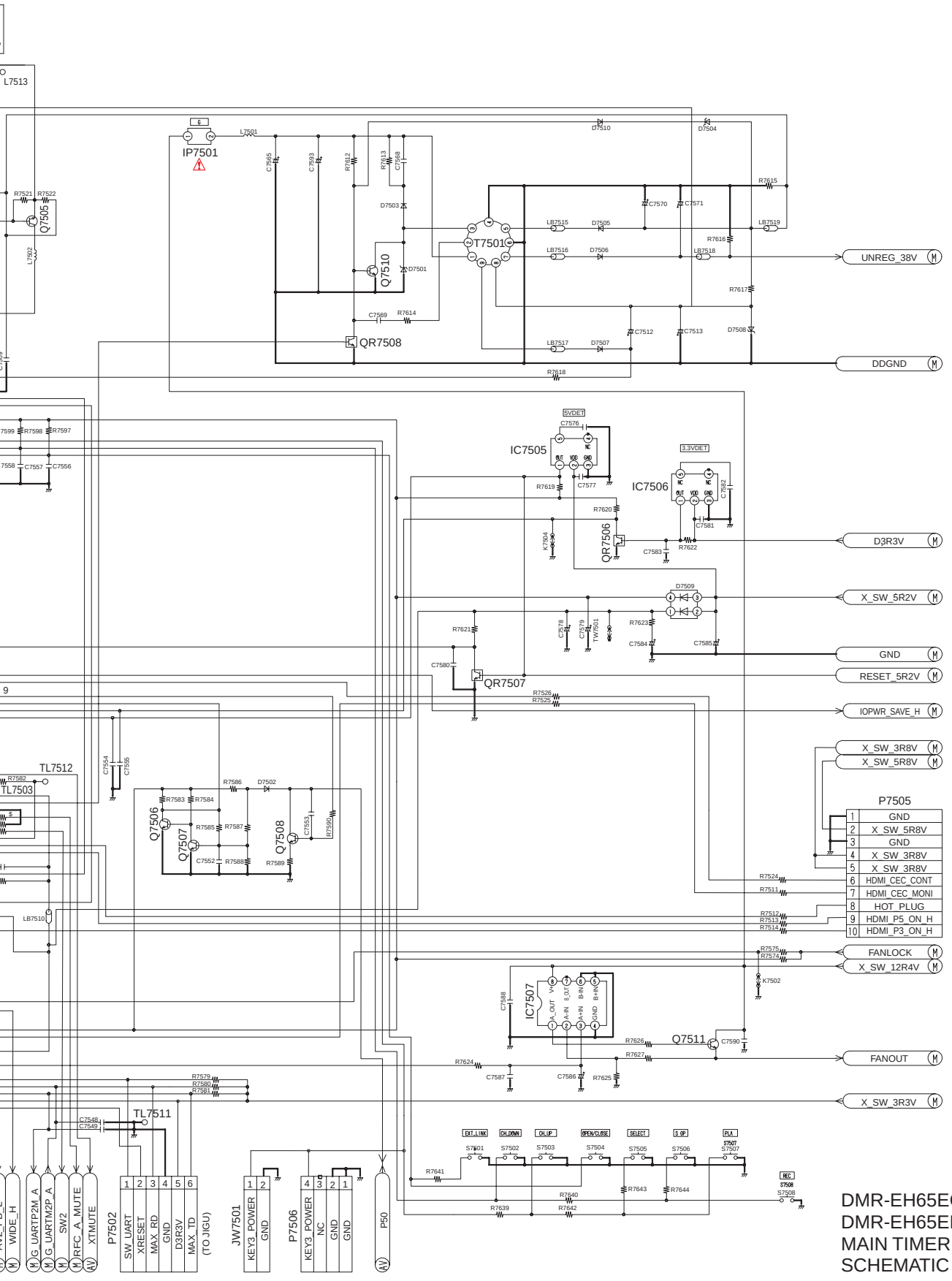

DMR-EH65EC
DMR-EH65EP
MAIN TIMER
SCHEMATIC DIAGRAM

13.6. MAIN NICAM

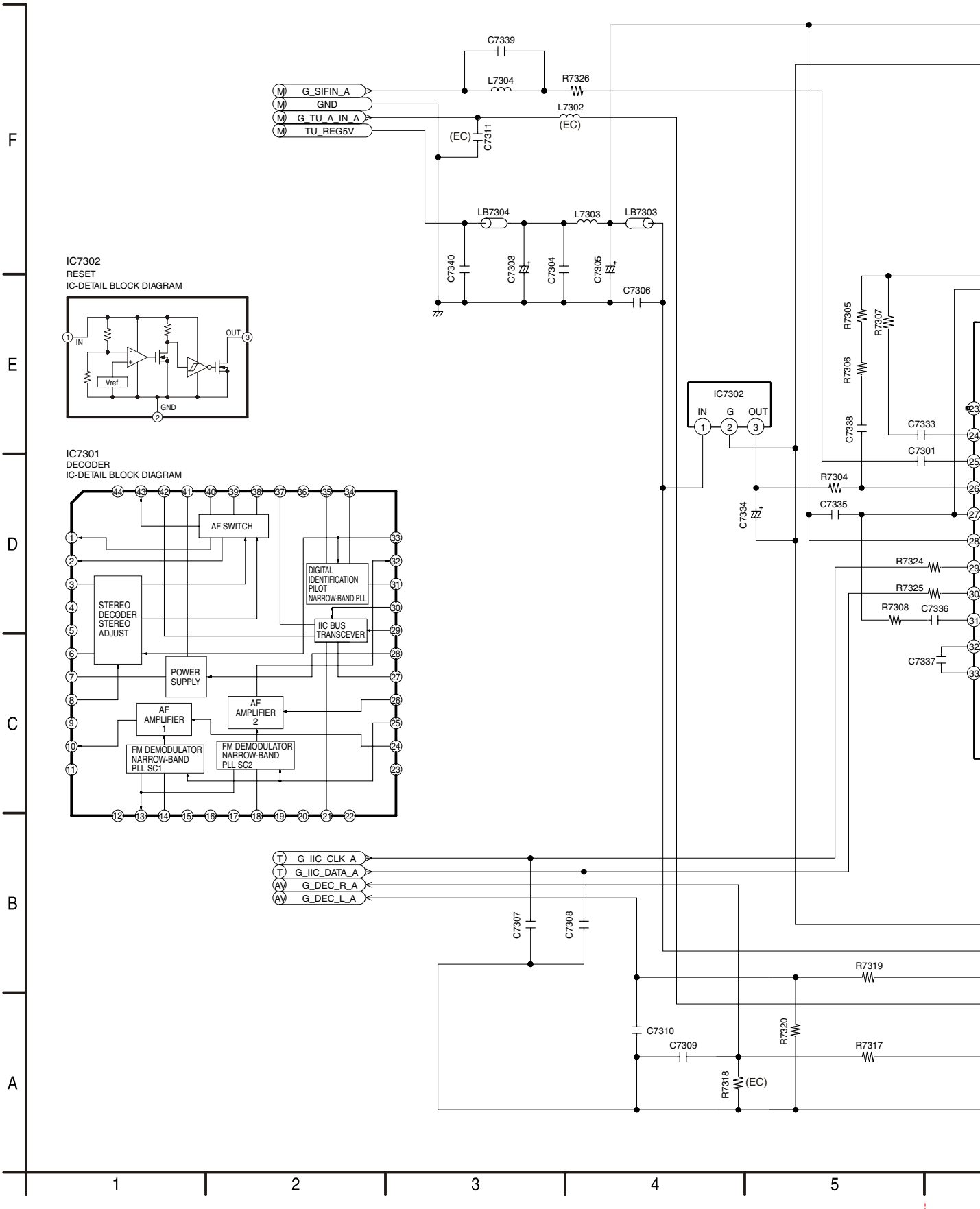

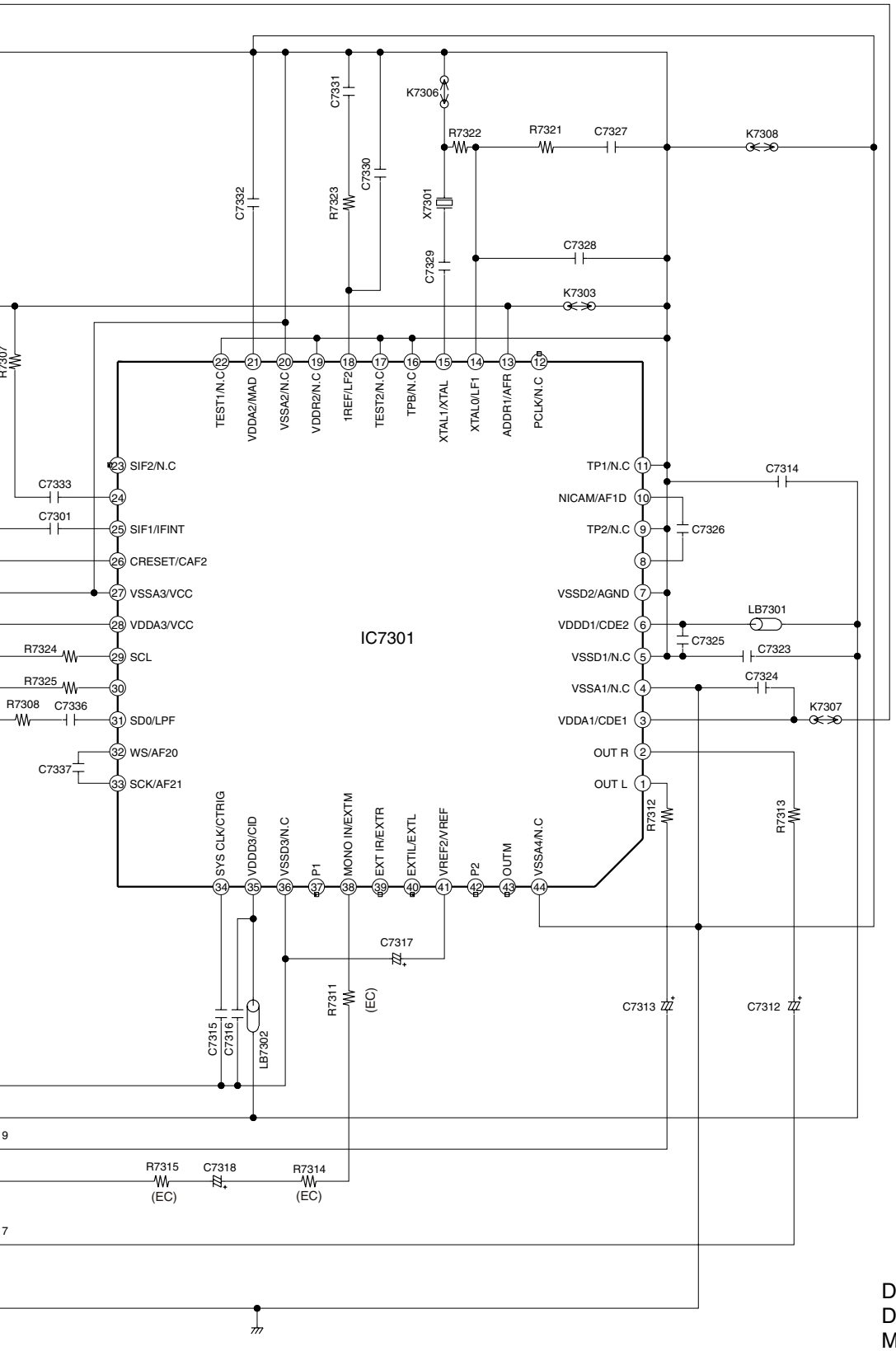

DMR-EH65EC
DMR-EH65EP
MAIN NICAM
SCHEMATIC DIAGRAM

13.7. TUNER

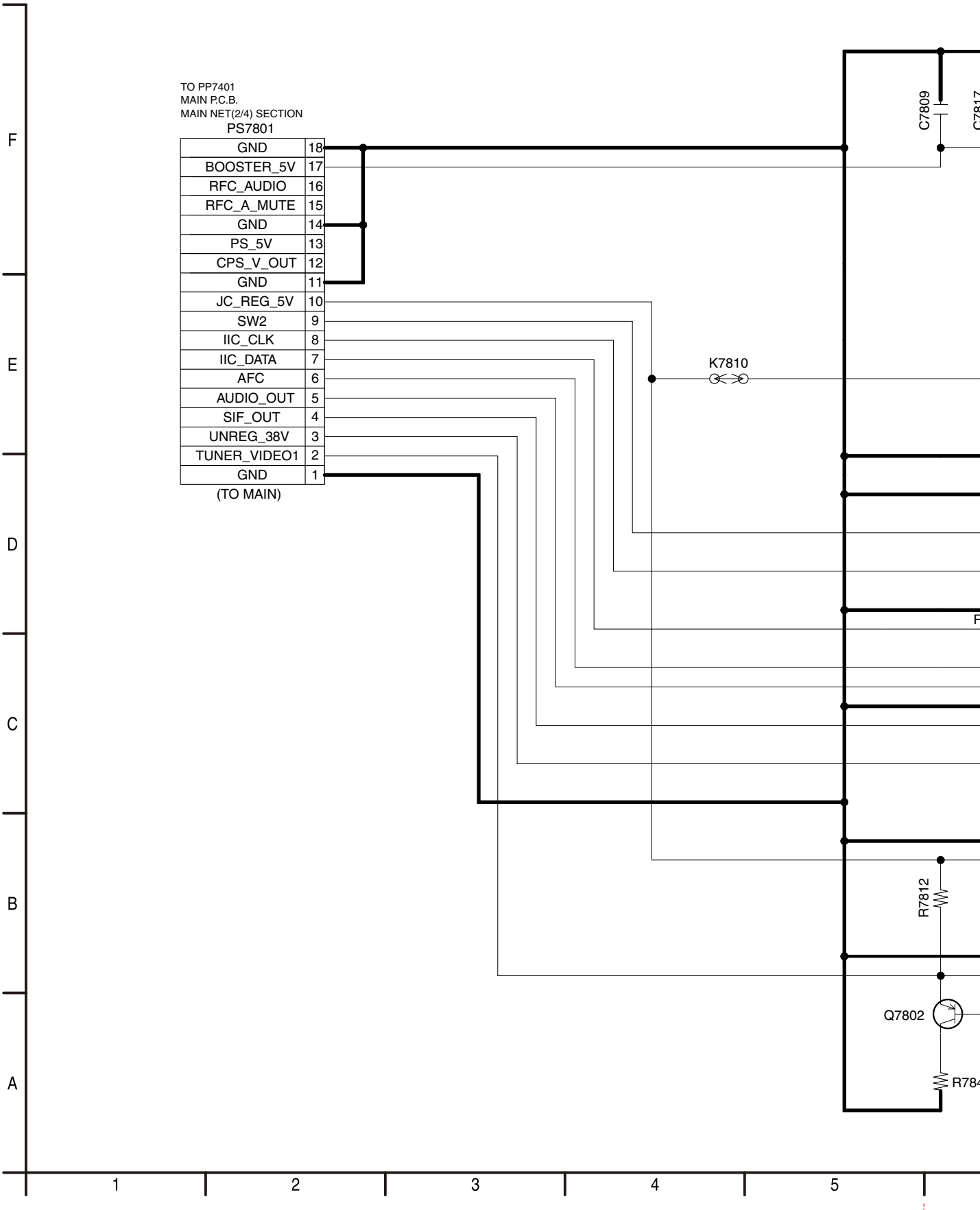
TO PP7401
MAIN P.C.B.
MAIN NET(2/4) SECTION
PS7801
GND 18
BOOSTER_5V 17
RFC_AUDIO 16
RFC_A_MUTE 15
GND 14
PS_5V 13
CPS_V_OUT 12
GND 11
JC_REG_5V 10
SW2 9
IIC_CLK 8
IIC_DATA 7
AFC 6
AUDIO_OUT 5
SIF_OUT 4
UNREG_38V 3
TUNER_VIDEO1 2
GND 1
(TO MAIN)
C7809
K7810
R7812
Q7802
F
R784
1
2
3
4
5
A
B
C
D
E
F

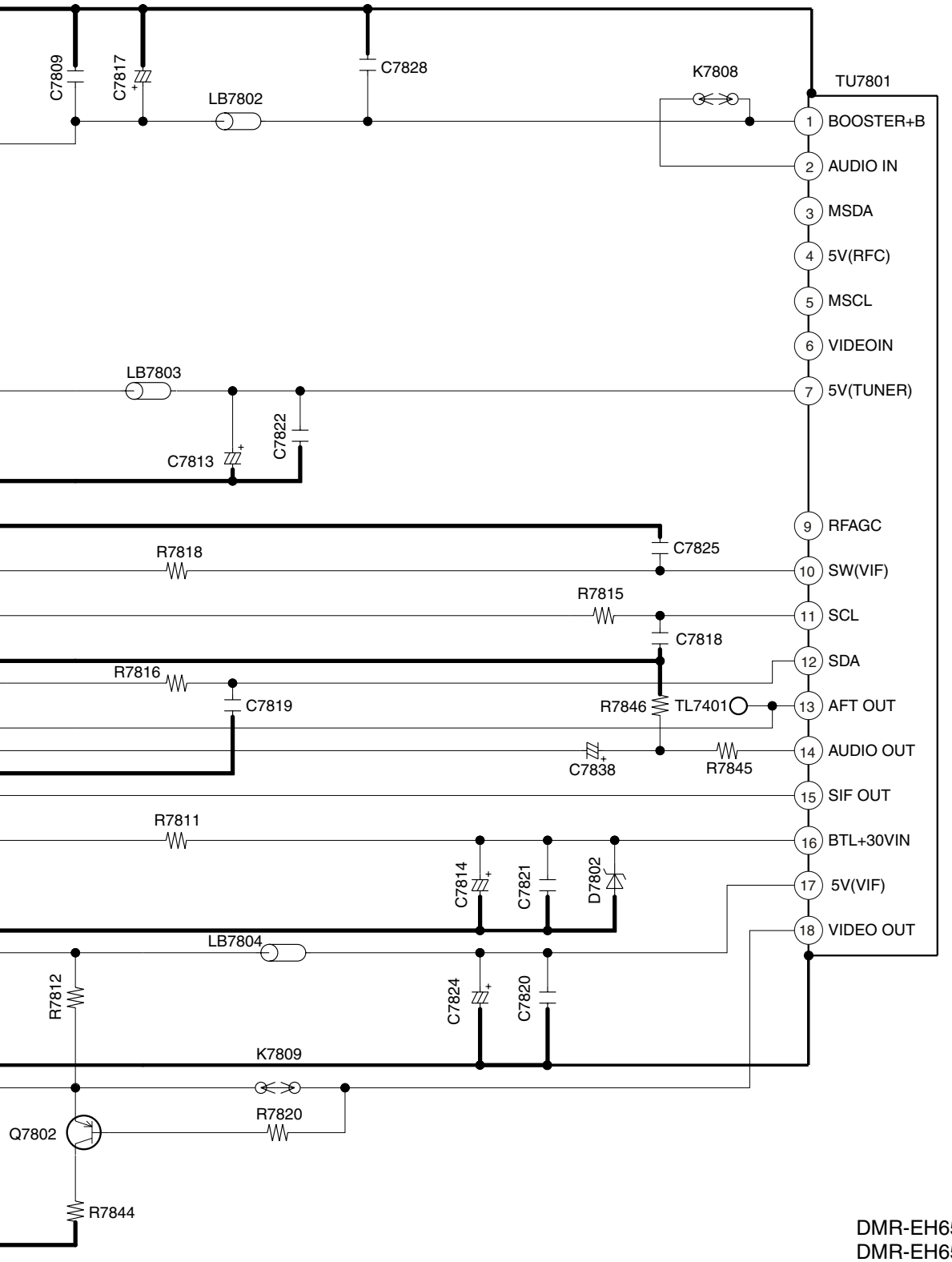

DMR-EH65EC
DMR-EH65EP
TUNER
SCHEMATIC DIAGRAM

6 7 8 9 10

13.8. SD CARD / FRONT / DV IN

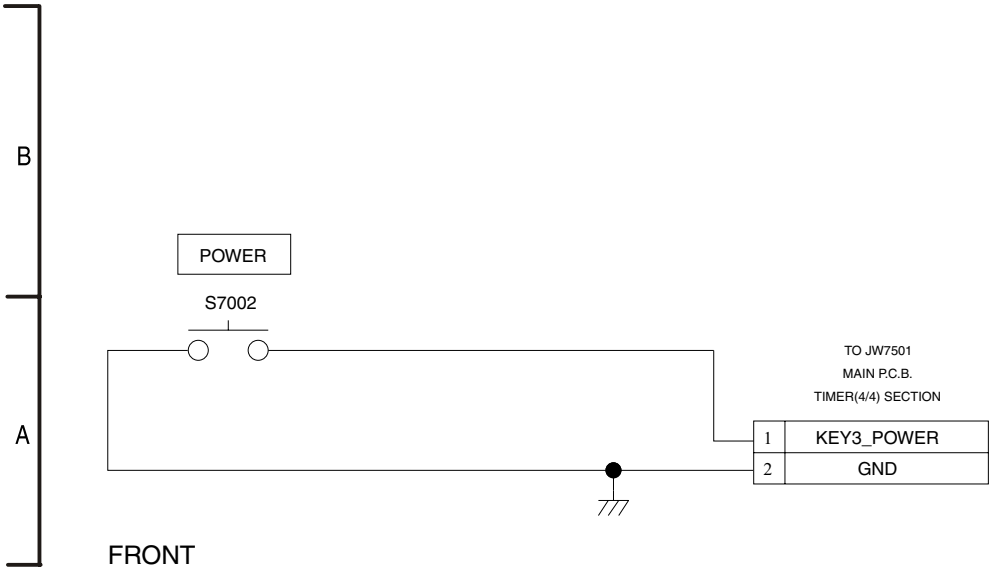

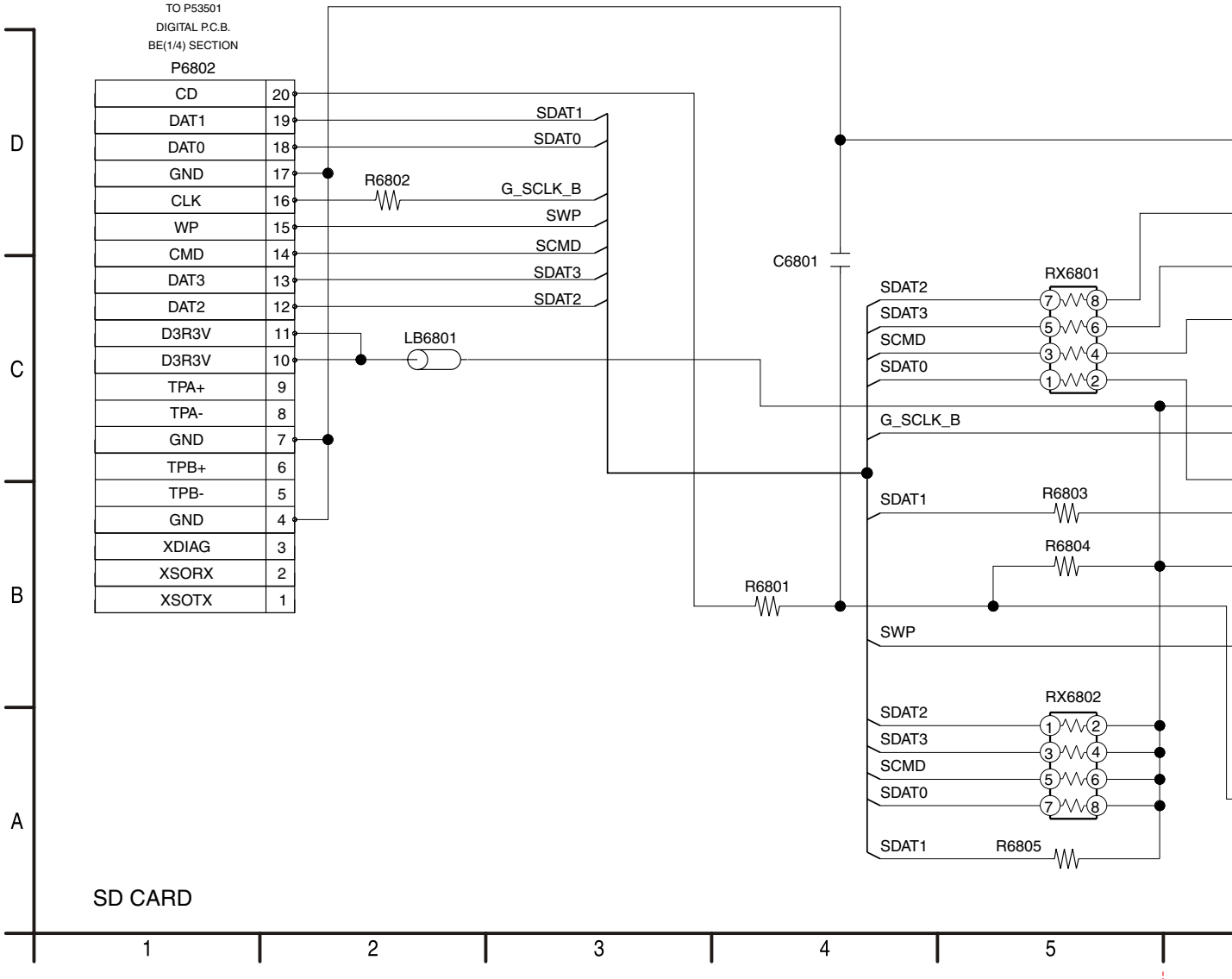

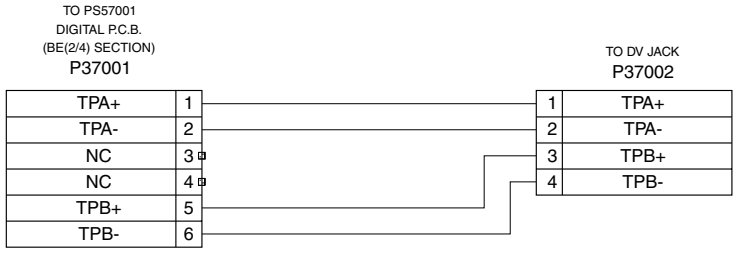

DV IN

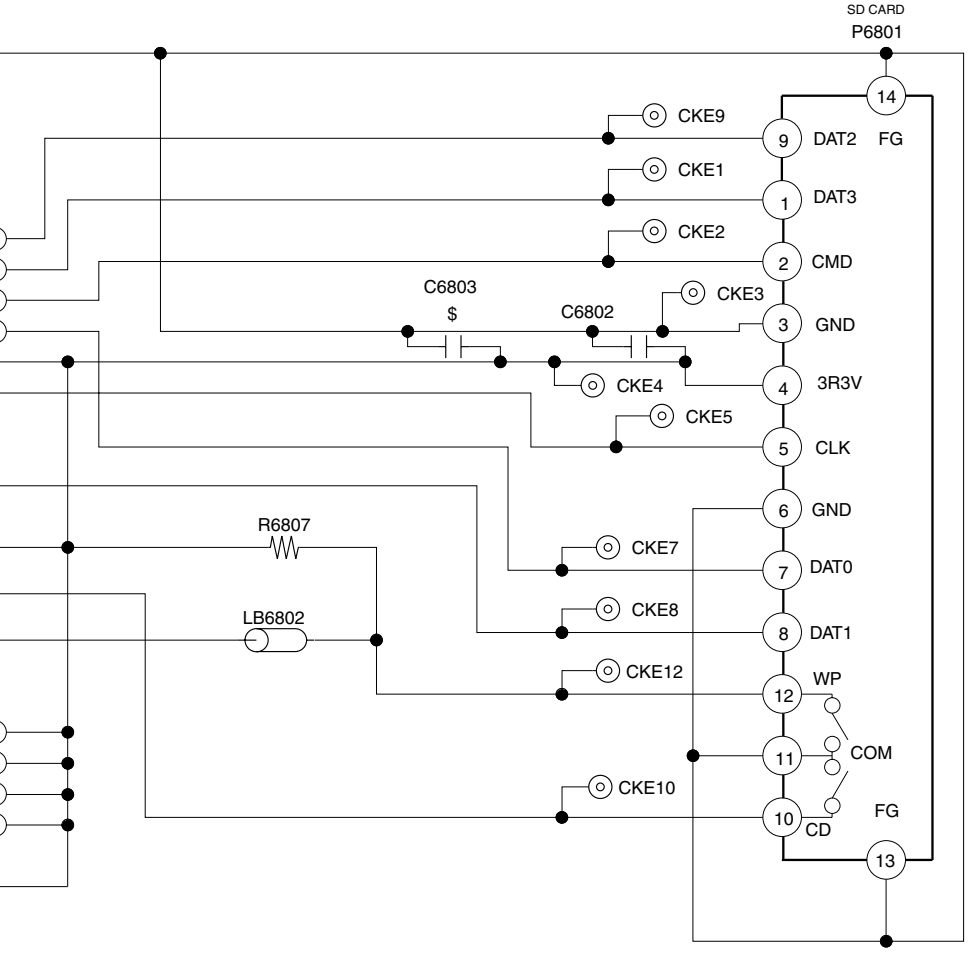

DMR-EH65EC
DMR-EH65EP
SD CARD / FRONT / DV IN
SCHEMATIC DIAGRAM

6 7 8 9 10

13.9. HDMI

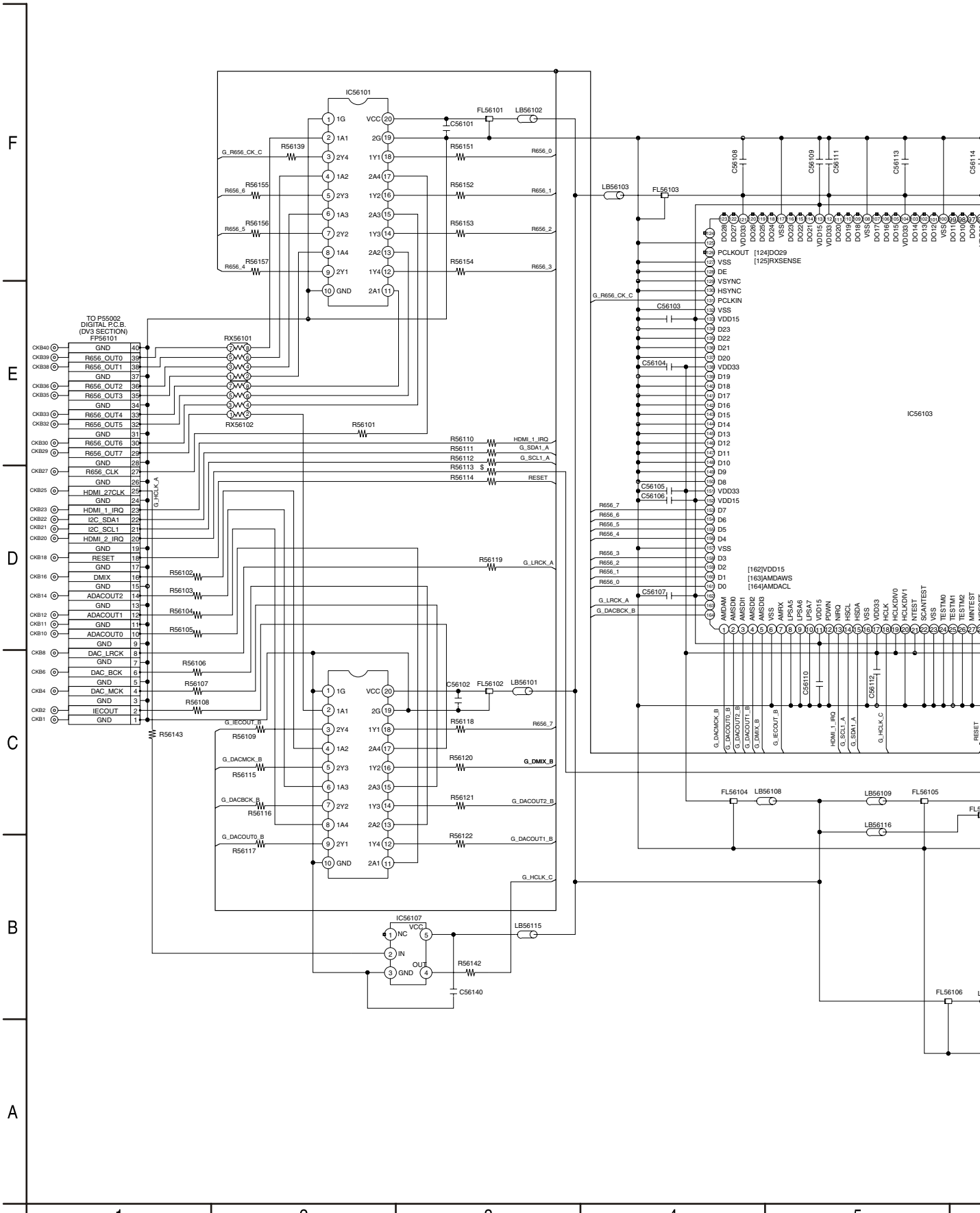

IC56101
IC56103
IC56107
TO P55002
DIGITAL P.C.B.
(DV3 SECTION)
FP56101
RX56101
RX56102
FL56101
LB56102
LB56103
FL56103
FL56102
LB56101
FL56104
LB56108
LB56109
FL56105
LB56116
FL56106
LB56115
C56101
C56102
C56103
C56104
C56105
C56106
C56107
C56108
C56109
C56111
C56113
C56114
C56110
C56112
C56140
R56101
R56102
R56103
R56104
R56105
R56106
R56107
R56108
R56109
R56110
R56111
R56112
R56113
R56114
R56115
R56116
R56117
R56118
R56119
R56120
R56121
R56122
R56139
R56142
R56143
R56151
R56152
R56153
R56154
R56155
R56156
R56157
G_R656_CK_C
G_HCLK_A
G_IECOUT_B
G_DACMCK_B
G_DACBCK_B
G_DACOUT0_B
G_DACOUT2_B
G_DACOUT1_B
G_HCLK_C
G_LRCK_A
G_DACBCK_B
HDMI_1_IRQ
G_SDA1_A
G_SCL1_A
RESET
G_DMIX_B
[124]DO29
[125]RXSENSE
[162]VDD15
[163]AMDAWS
[164]AMDACL

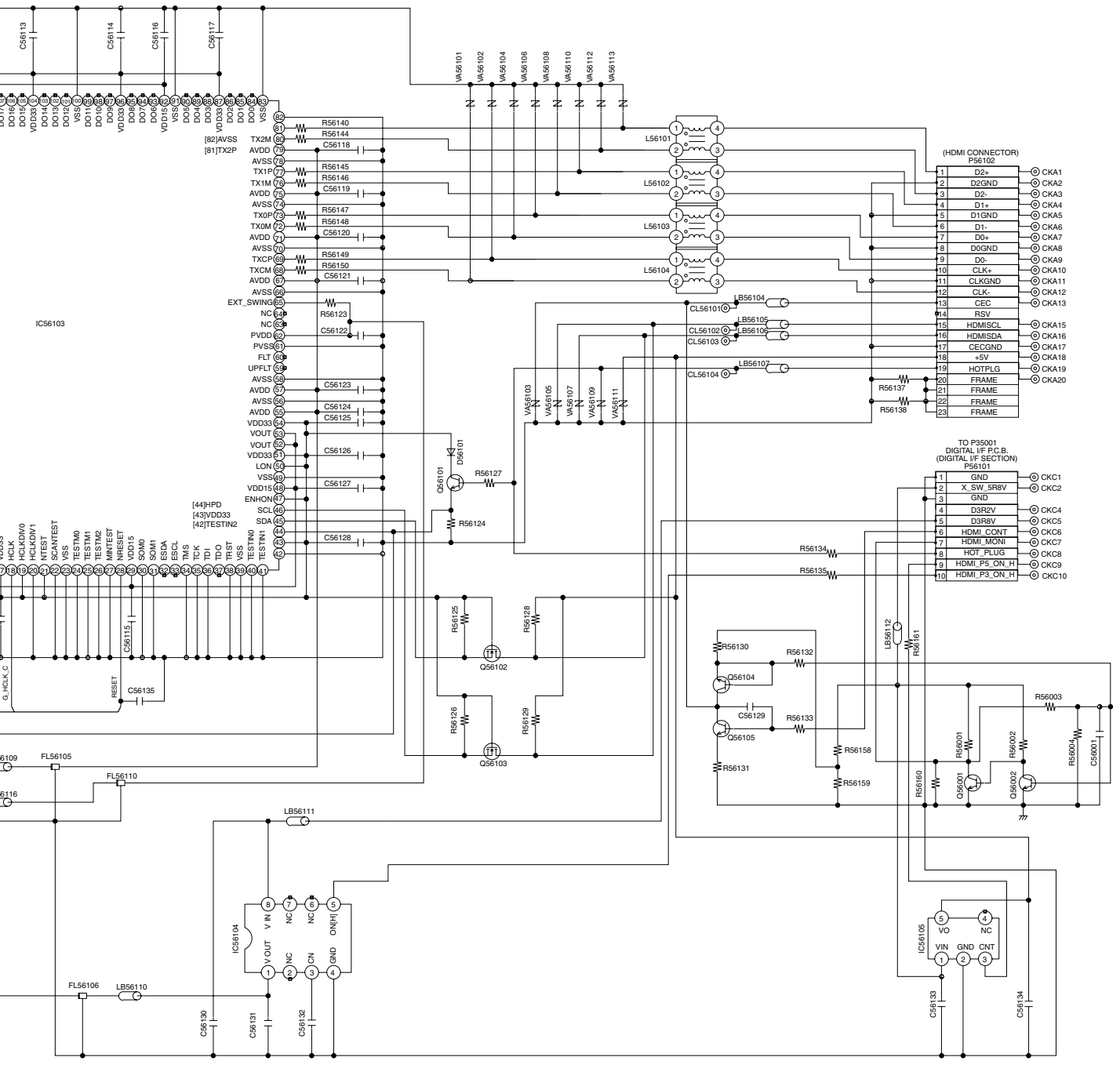

DMR-EH65EC
DMR-EH65EP
HDMI
SCHEMATIC DIAGRAM

14 PRINTED CIRCUIT BOARD

14.1. POWER P.C.B.

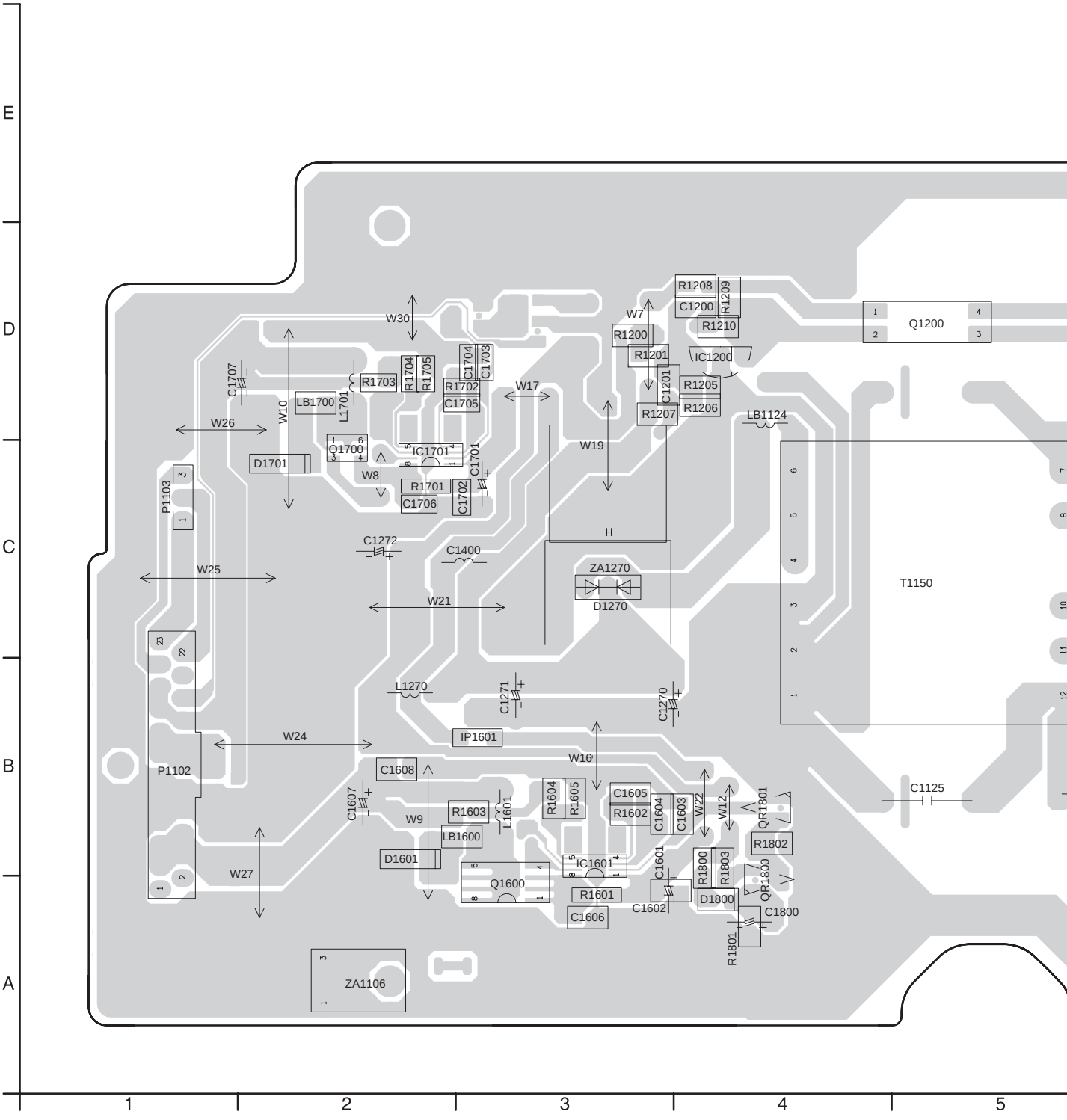

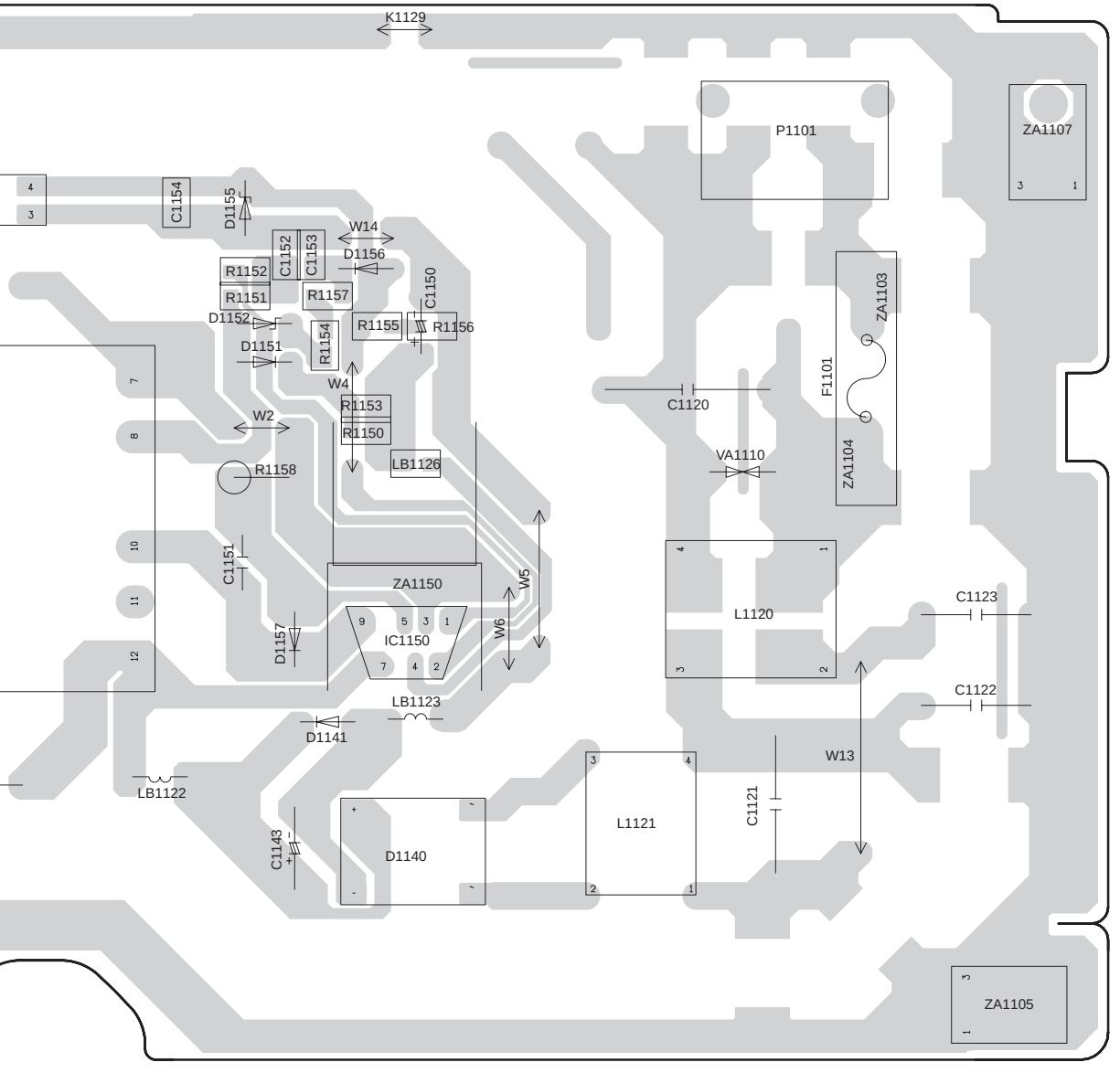

DMR-EH65EC
DMR-EH65EP
POWER
VEP71110A

5 6 7 8 9

14.2. MAIN P.C.B.

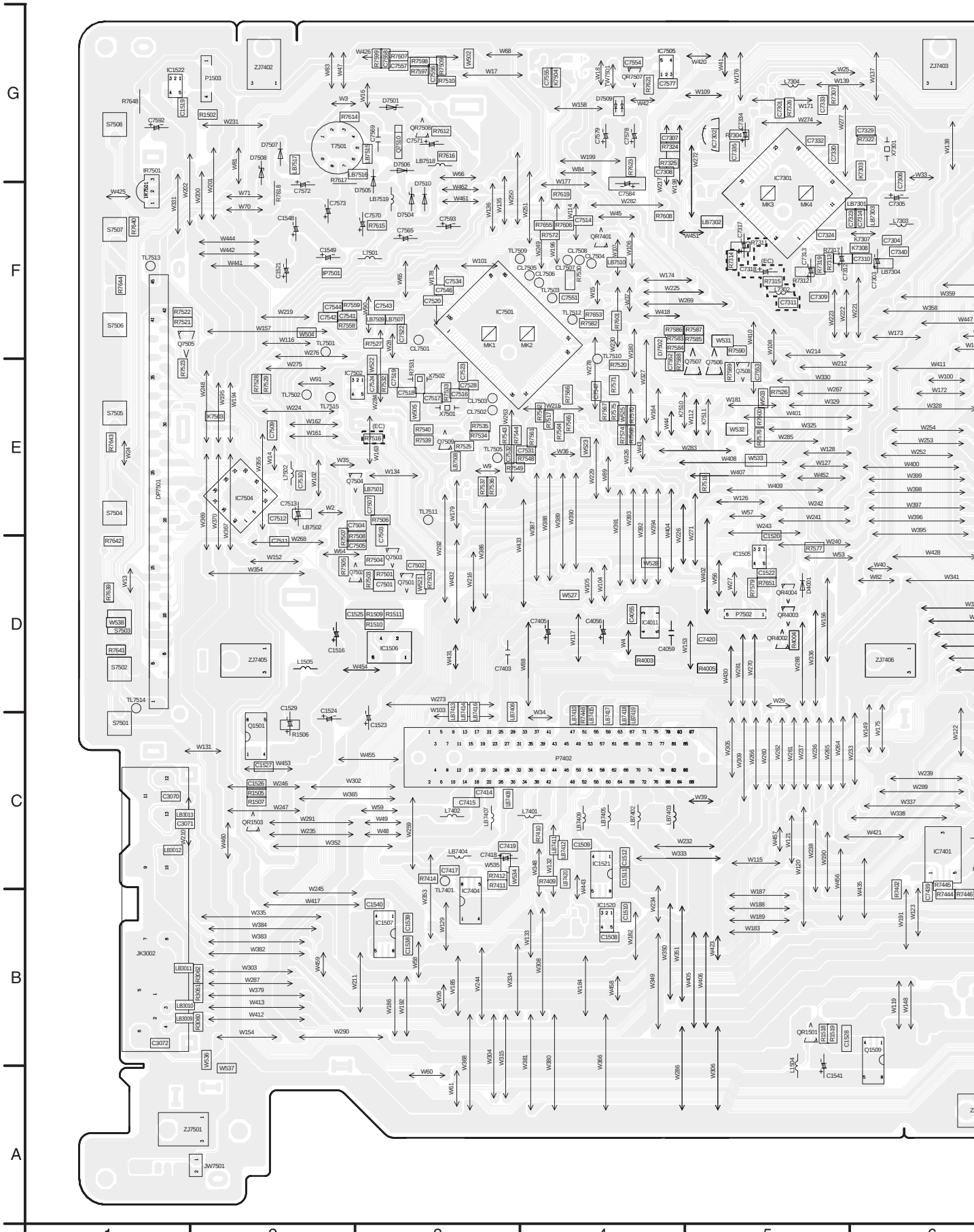

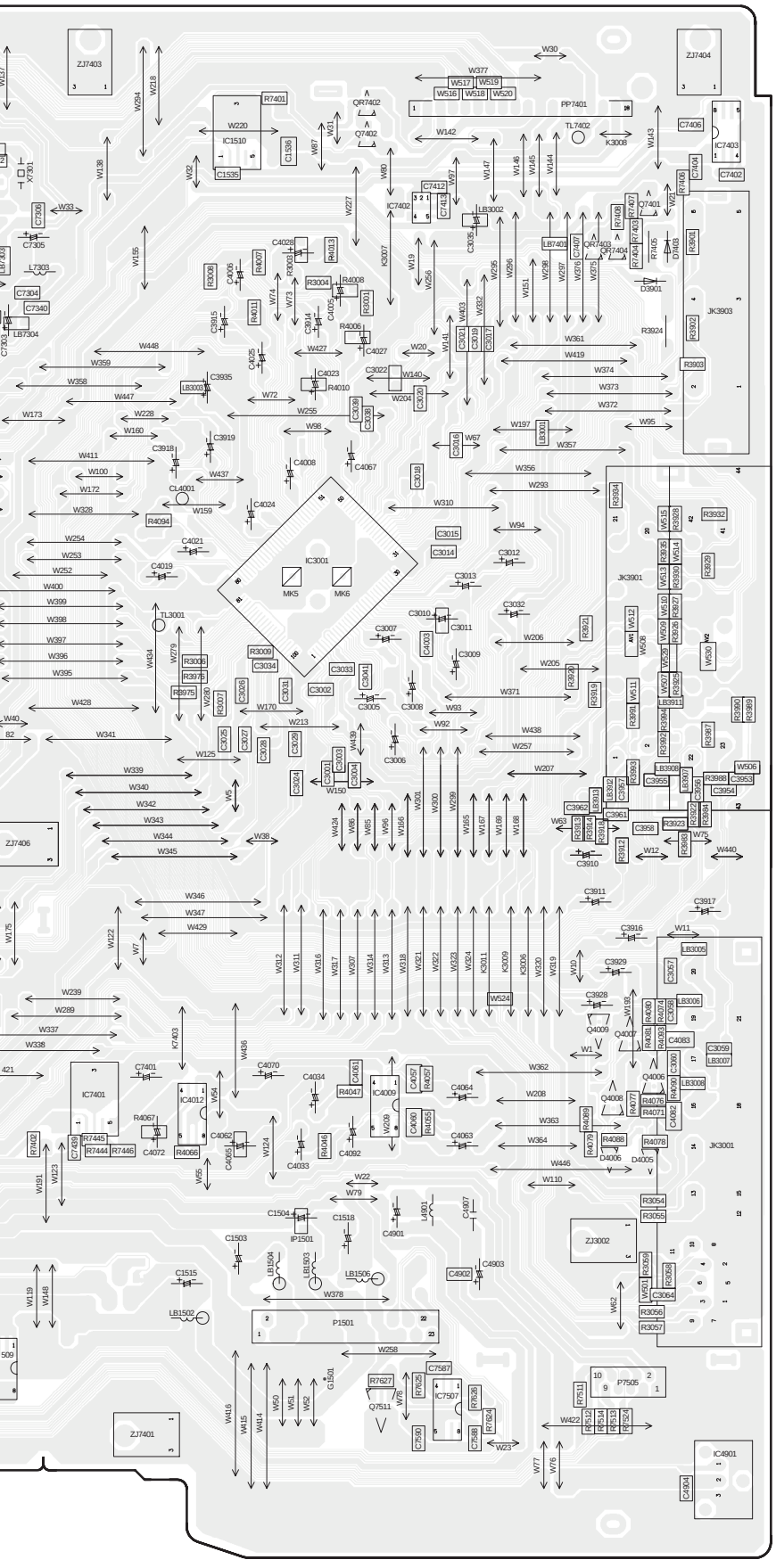

ADRESS INFORMATION			
IC1505	D5	JK3001	B9
IC1506	D3	JK3002	B1
IC1507	B3	JK3901	E9
IC1510	G7	JK3903	F9
IC1520	B4		
IC1521	C4	P1501	B7
IC1522	G1	P1503	G2
IC3001	E7	P7402	C3
IC4009	C7	P7502	D5
IC4011	D4	P7505	A8
IC4012	C7	PP7401	G8
IC4901	A9		
IC7301	F5	IP1501	B7
IC7302	G5	IP7501	F2
IC7401	C6		
IC7402	G8	DP7501	E1
IC7403	G9		
IC7404	B3	T7501	G2
IC7501	F3		
IC7502	E3	TL3001	E6
IC7504	E2	TL7401	C3
IC7505	G4	TL7402	G8
IC7507	A8	TL7501	F2
		TL7502	E2
Q1501	C2	TL7503	F4
Q1509	A6	TL7505	E3
Q4006	C8	TL7509	F3
Q4007	C9	TL7510	E4
Q4008	C8	TL7511	E3
Q4009	C8	TL7512	F4
Q7401	G9	TL7513	F1
Q7402	G7	TL7514	D1
Q7501	D3	TL7515	E2
Q7502	D3		
Q7503	D3	TW7501	G4
Q7504	E3		
Q7505	F1	X7301	G6
Q7506	E5	X7501	E3
Q7507	E5	X7502	E3
Q7508	E5		
Q7510	G3		
Q7511	A7		
QR1501	B5		
QR1503	C2		
QR4002	D5		
QR4003	D5		
QR4004	D5		
QR7401	F4		
QR7402	G7		
QR7403	F8		
QR7404	F8		
QR7507	G4		
QR7508	G3		

DMR-EH65EC (VEP79119L)
DMR-EH65EP (VEP79119M)
MAIN PCB

14.3. TUNER P.C.B. / DV IN P.C.B.

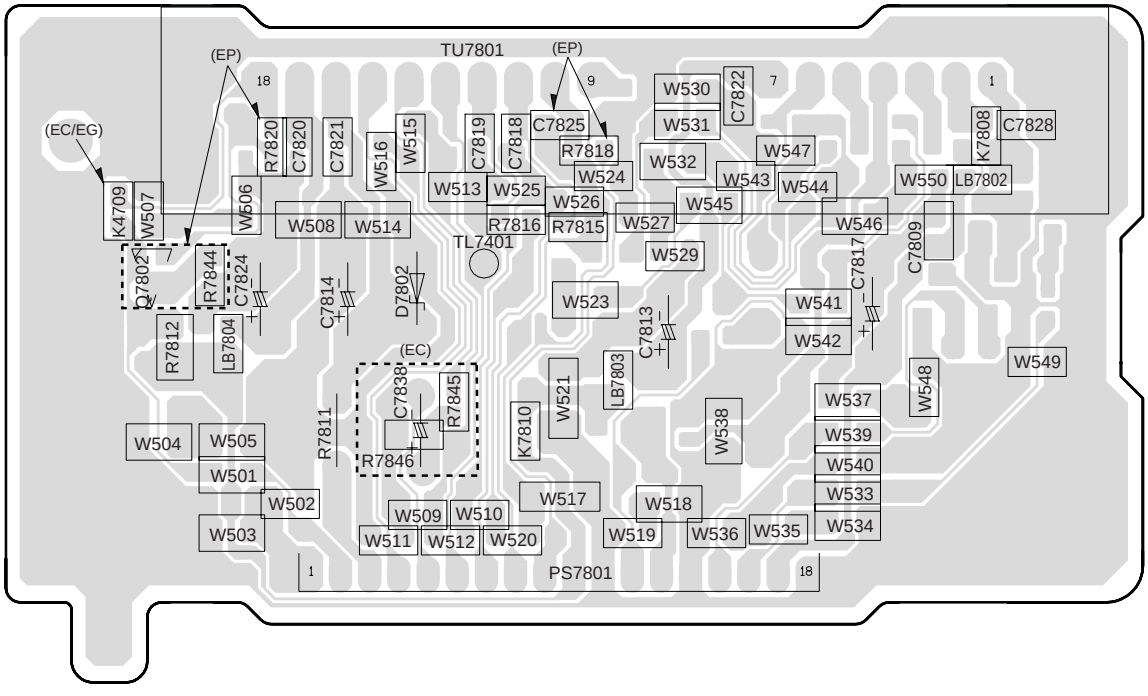

DMR-EH65EC (VEP07A91B)
DMR-EH65EP (VEP07A91D)
TUNER P.C.B

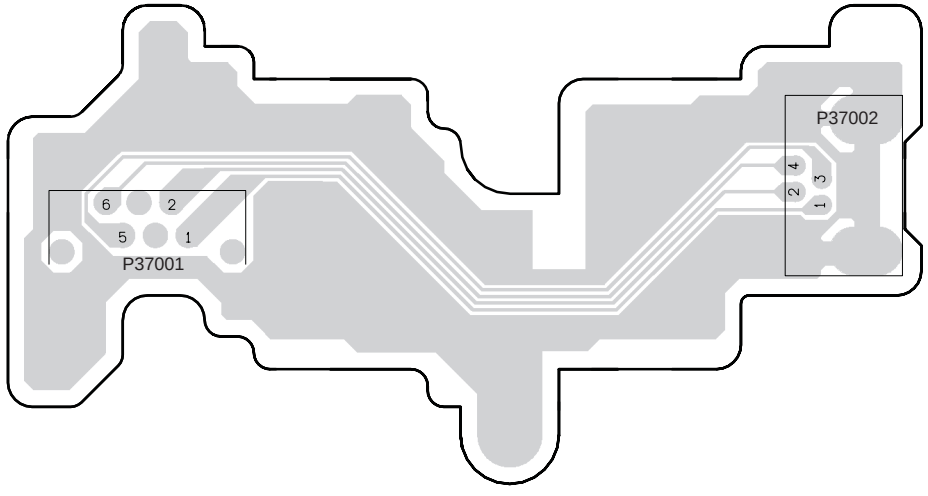

DMR-EH65EC
DMR-EH65EP
DV IN P.C.B.
VEP73135A

1B)
1D)

14.4. SD CARD P.C.B. / FRONT P.C.B.

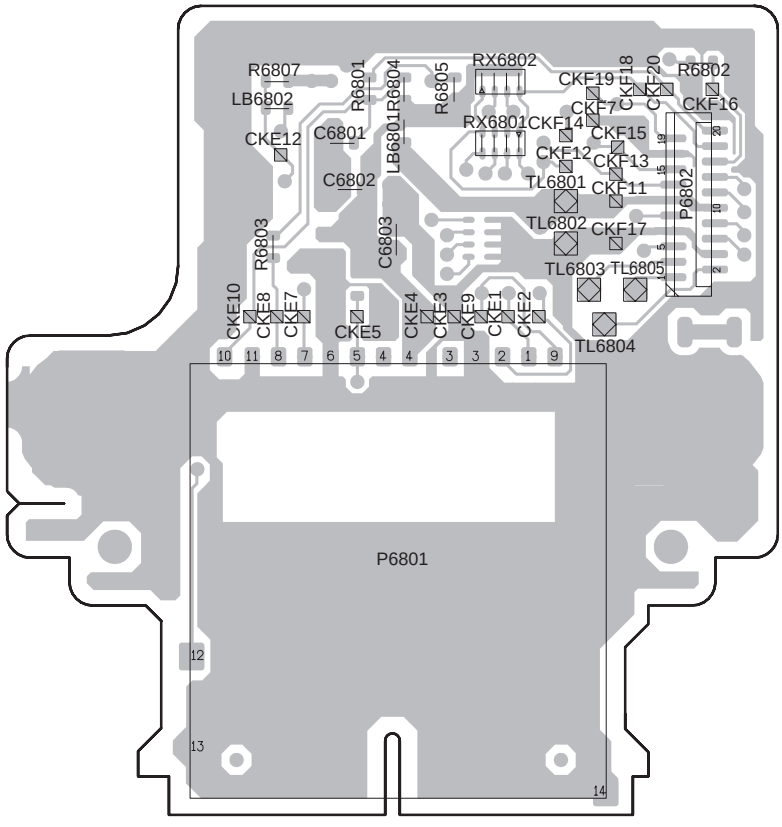

DMR-EH65EC
DMR-EH65EP
SD CARD
VEP73136A

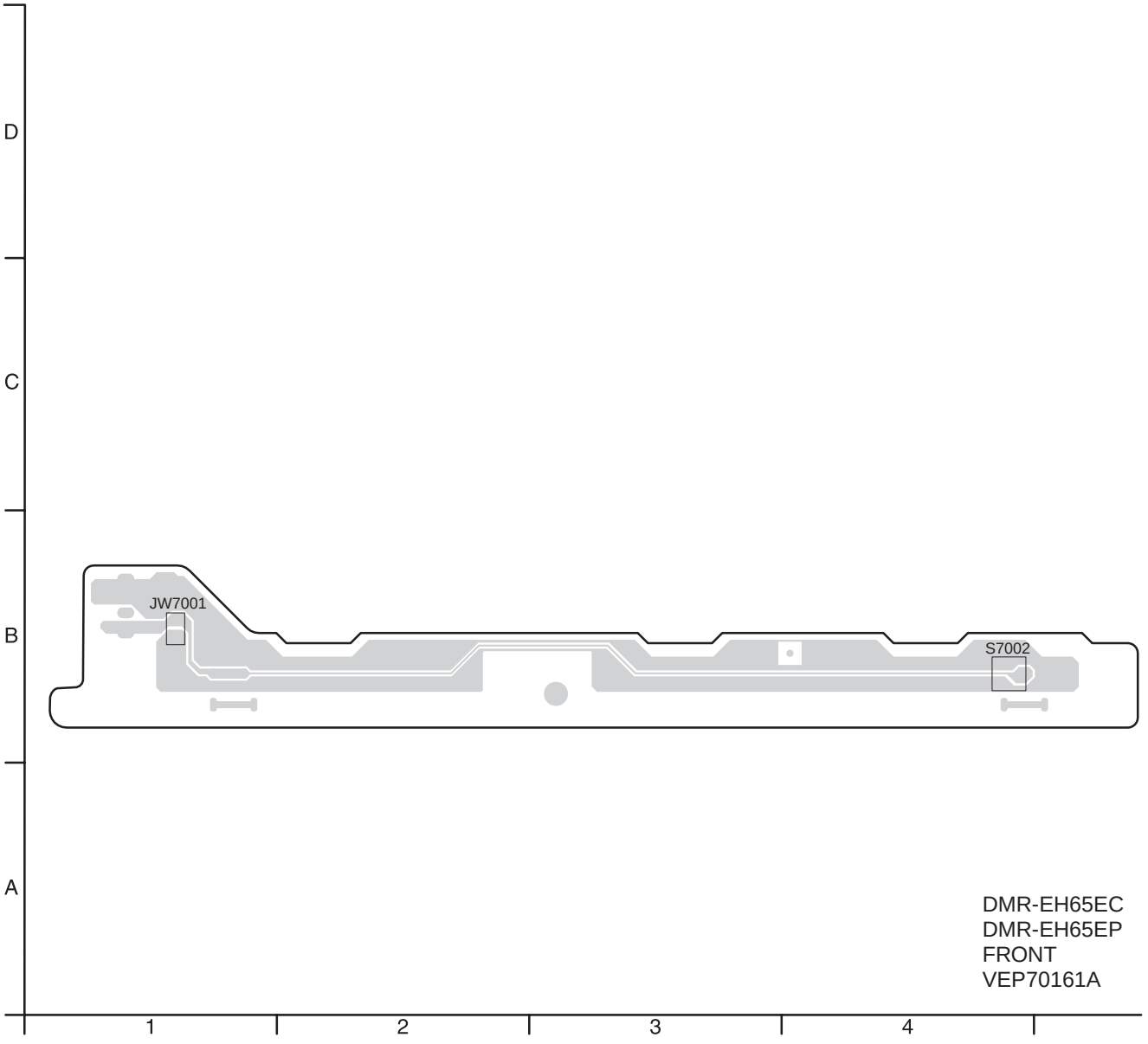

DMR-EH65EC
DMR-EH65EP
FRONT
VEP70161A

14.5. HDMI P.C.B.

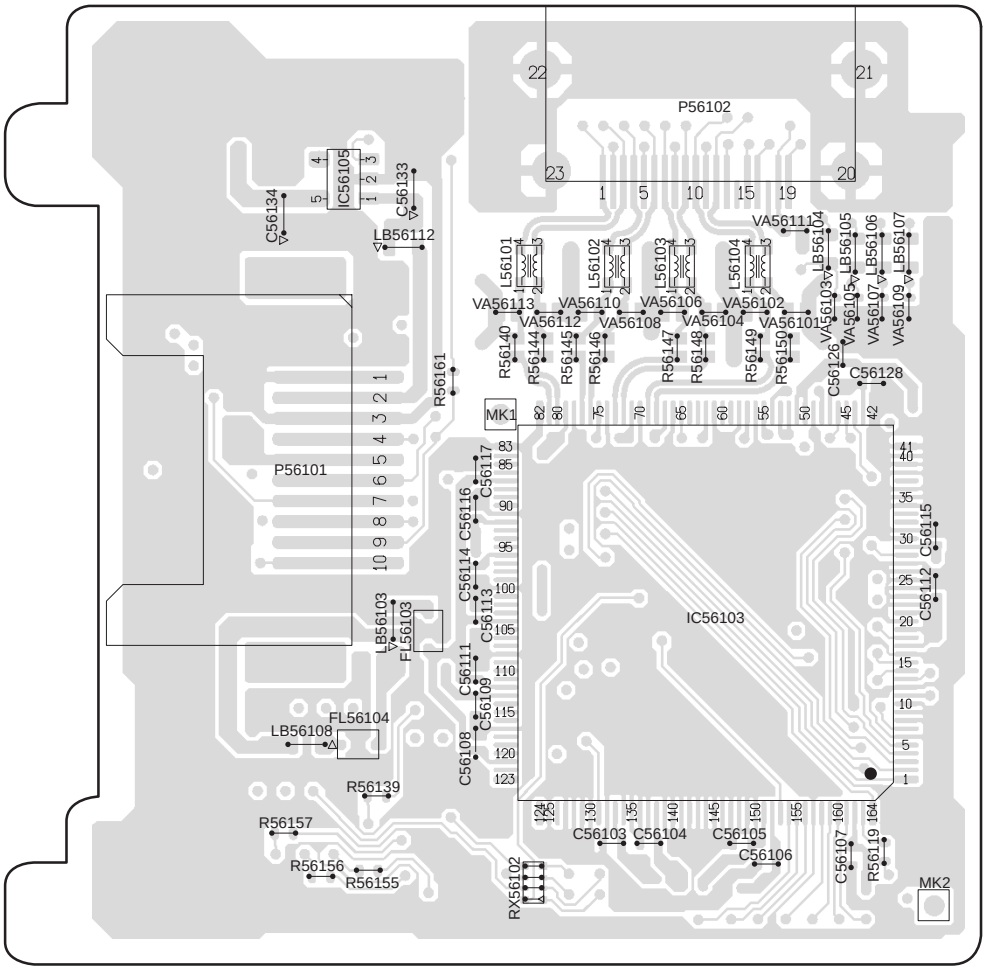

COMPONENT SIDE

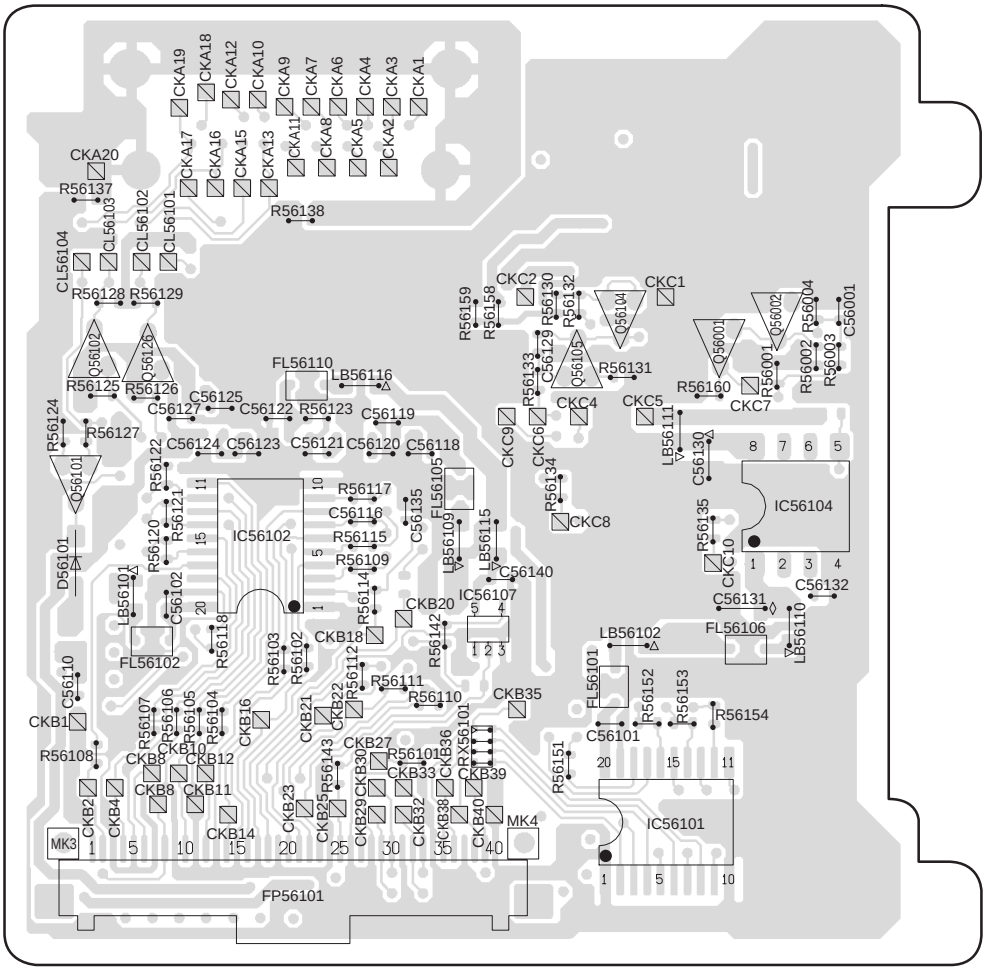

SOLDER SIDE

DMR-EH65EC
DMR-EH65EP
HDMI P.C.B.
VEP73137A

5 6 7 8 9

12 BLOCK DIAGRAM

12.1. POWER BLOCK DIAGRAM

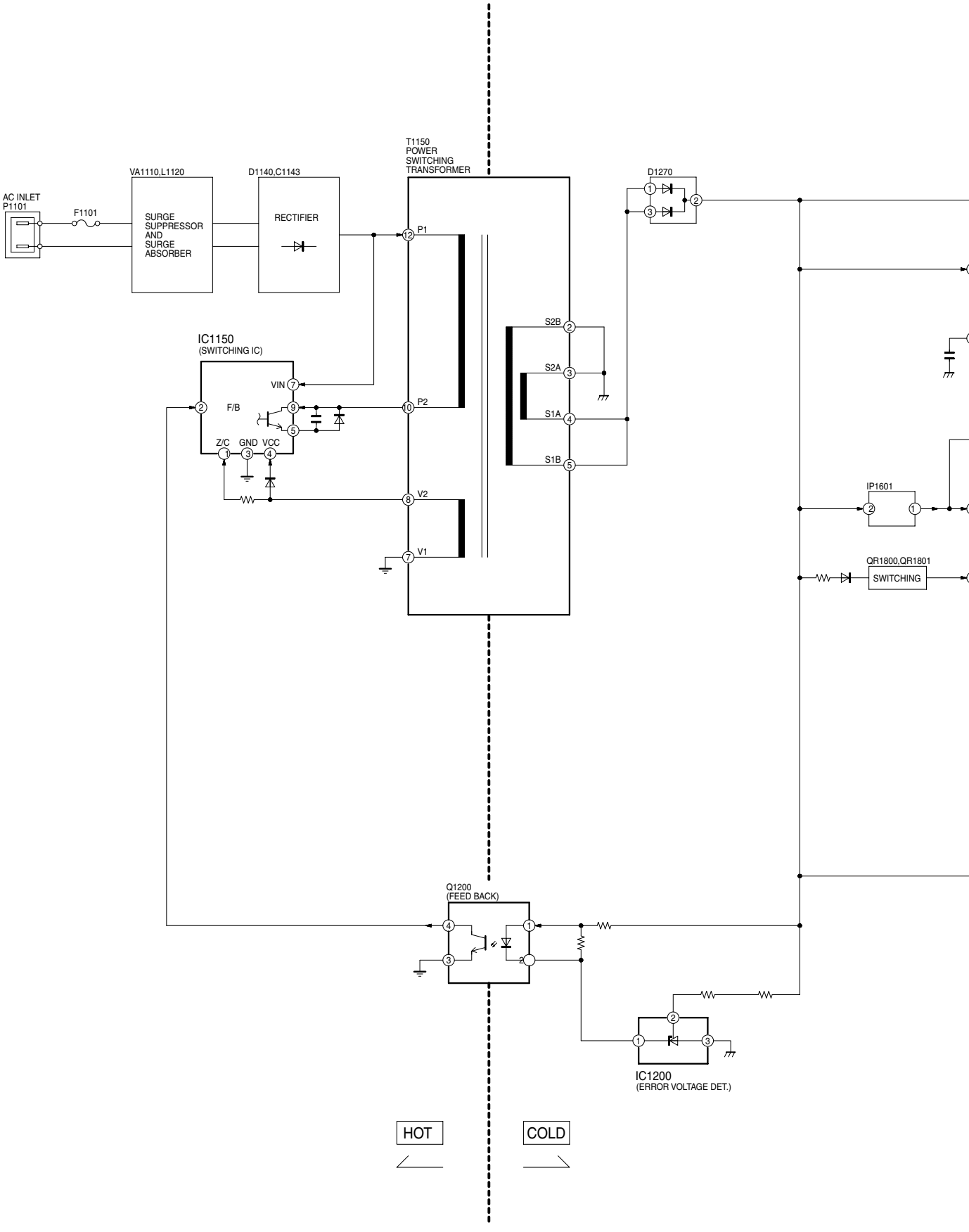

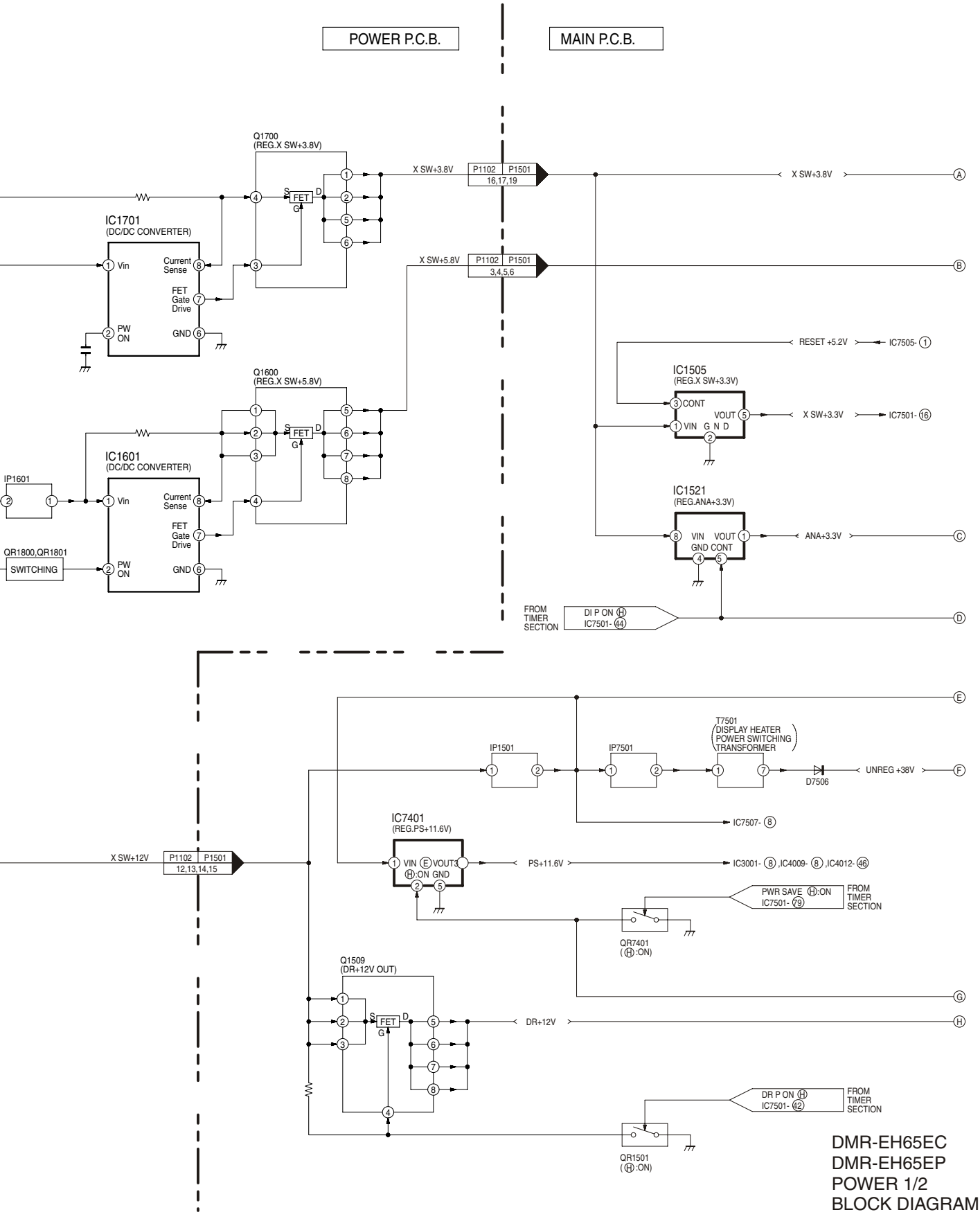

DMR-EH65EC
DMR-EH65EP
POWER 1/2
BLOCK DIAGRAM

MAIN P.C.B.

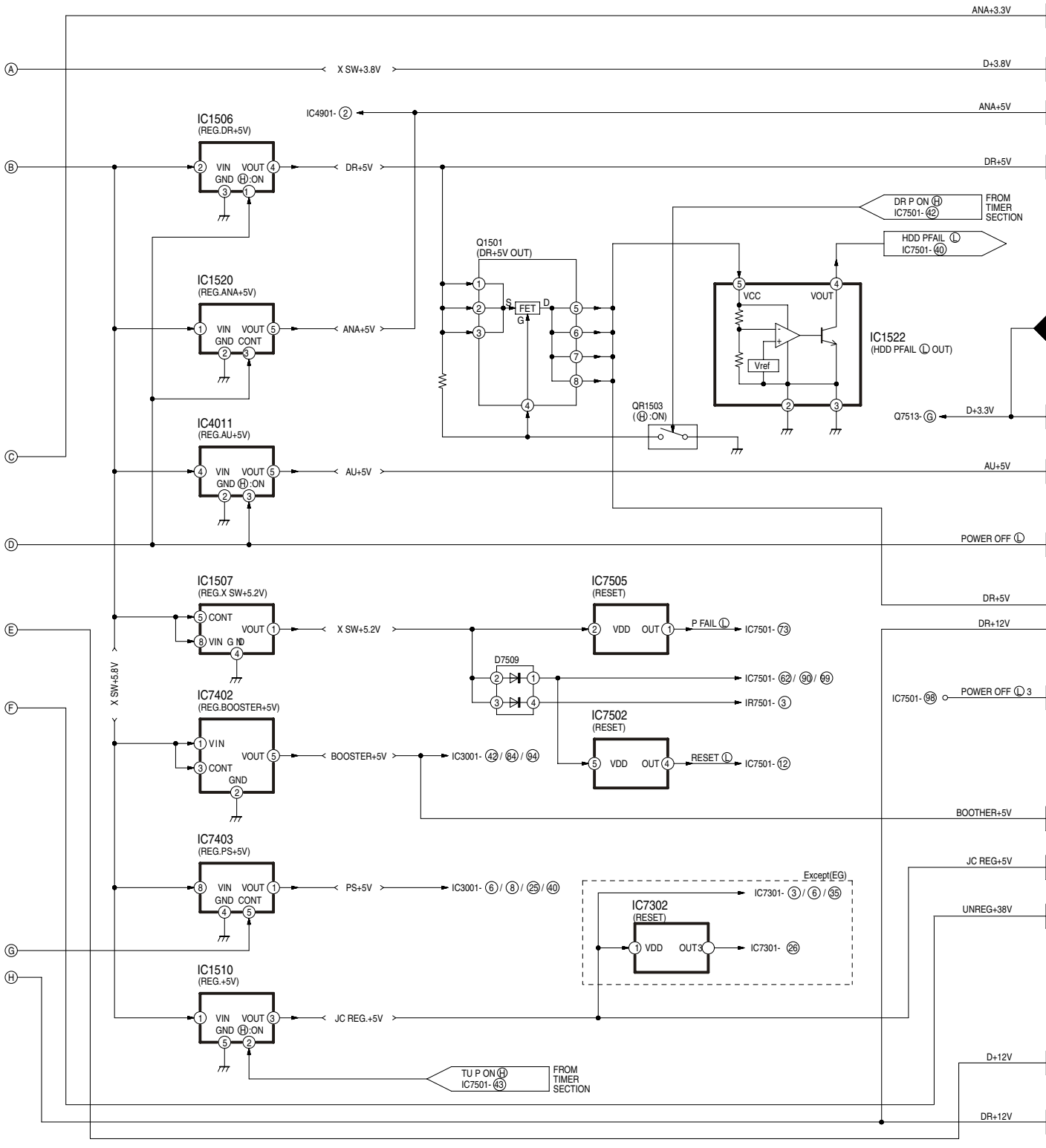
ANA+3.3V
X SW+3.8V
D+3.8V
IC4901- 2
ANA+5V
IC1506
(REG.DR+5V)
VIN VOUT
GND H:ON
DR+5V
DR+5V
DR P ON H
IC7501- 42
FROM
TIMER
SECTION
HDD PFAIL L
IC7501- 40
Q1501
(DR+5V OUT)
FET
S
D
G
IC1520
(REG.ANA+5V)
VIN VOUT
GND CONT
ANA+5V
VCC
VOUT
Vref
IC1522
(HDD PFAIL L OUT)
QR1503
(H:ON)
Q7513- G
D+3.3V
IC4011
(REG.AU+5V)
VIN VOUT
GND H:ON
AU+5V
AU+5V
POWER OFF L
IC1507
(REG.X SW+5.2V)
CONT
VOUT
VIN GND
X SW+5.2V
IC7505
(RESET)
VDD OUT
P FAIL L
IC7501- 73
DR+5V
DR+12V
D7509
IC7501- 62 / 90 / 99
IR7501- 3
IC7501- 98
POWER OFF L 3
X SW+5.8V
IC7402
(REG.BOOSTER+5V)
VIN
VOUT
CONT
GND
BOOSTER+5V
IC3001- 42 / 84 / 94
IC7502
(RESET)
VDD OUT
RESET L
IC7501- 12
BOOTHER+5V
IC7403
(REG.PS+5V)
VIN VOUT
GND CONT
PS+5V
IC3001- 6 / 8 / 25 / 40
JC REG+5V
Except(EG)
IC7301- 3 / 6 / 35
IC7302
(RESET)
VDD OUT3
IC7301- 26
UNREG+38V
IC1510
(REG.+5V)
VIN VOUT
GND H:ON
JC REG.+5V
TU P ON H
IC7501- 43
FROM
TIMER
SECTION
D+12V
DR+12V

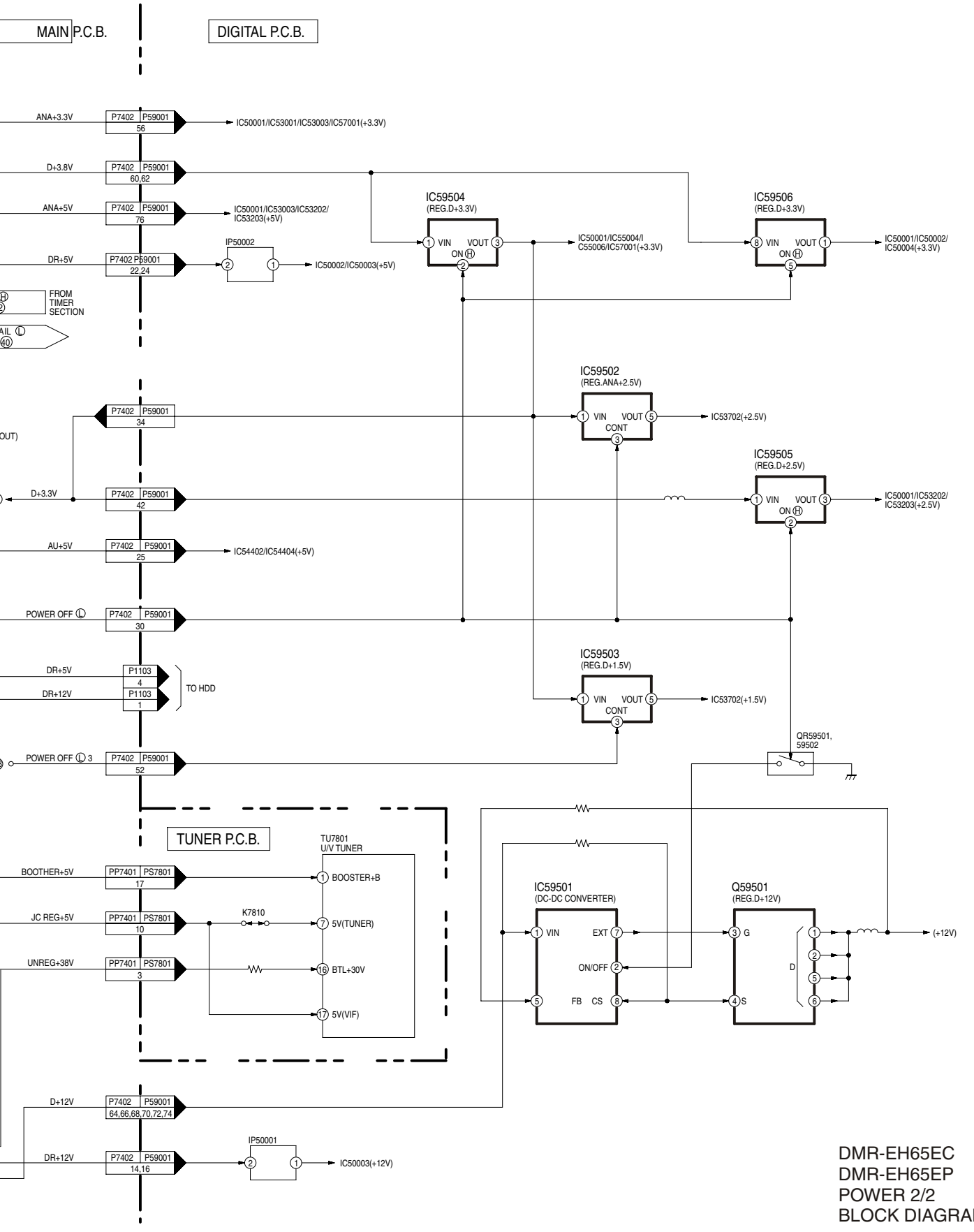

DMR-EH65EC
DMR-EH65EP
POWER 2/2
BLOCK DIAGRAM

12.2. ANALOG VIDEO BLOCK DIAGRAM

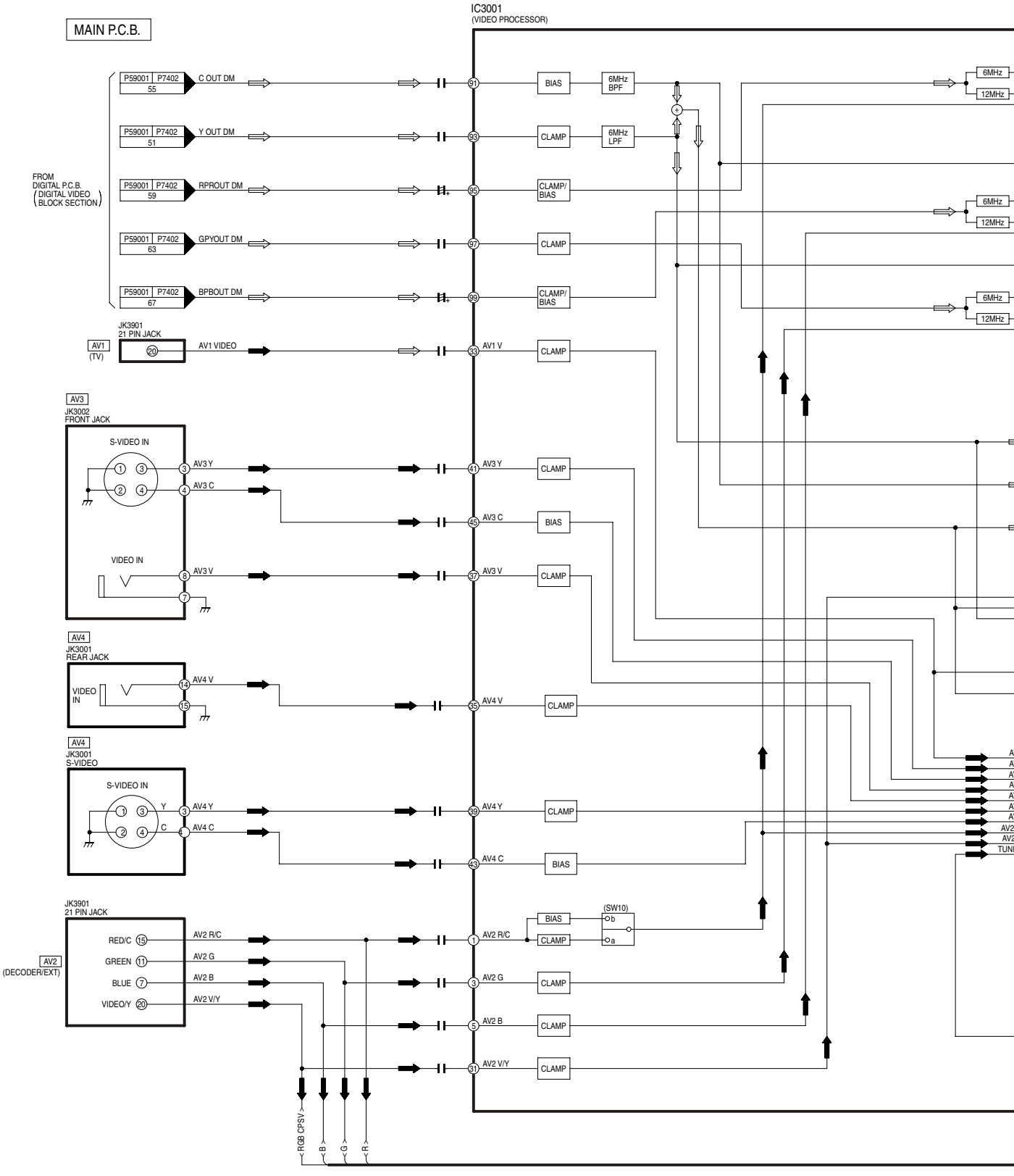

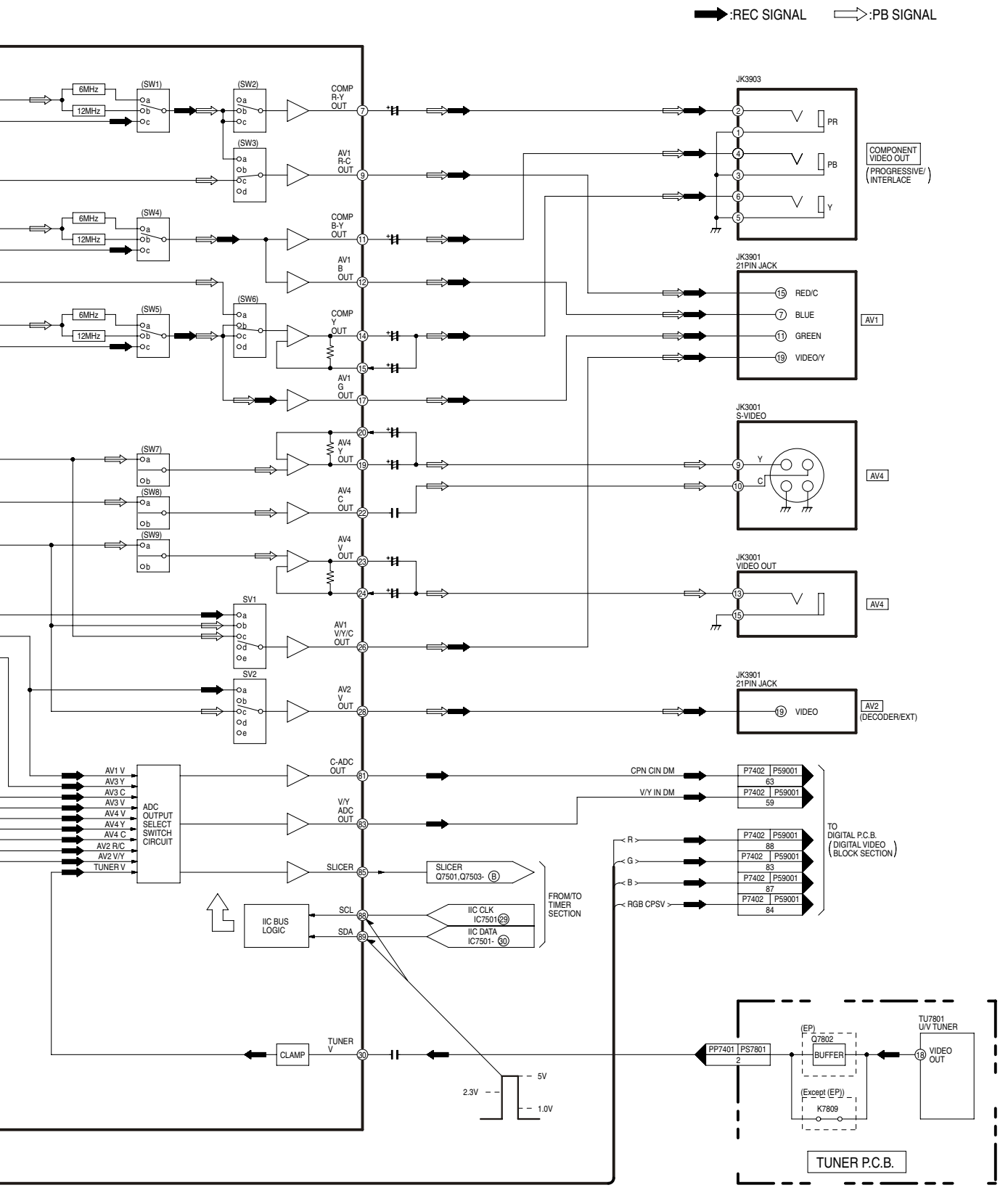

DMR-EH65EC
DMR-EH65EP
ANALOG VIDEO
BLOCK DIAGRAM

12.3. ANALOG AUDIO BLOCK DIAGRAM

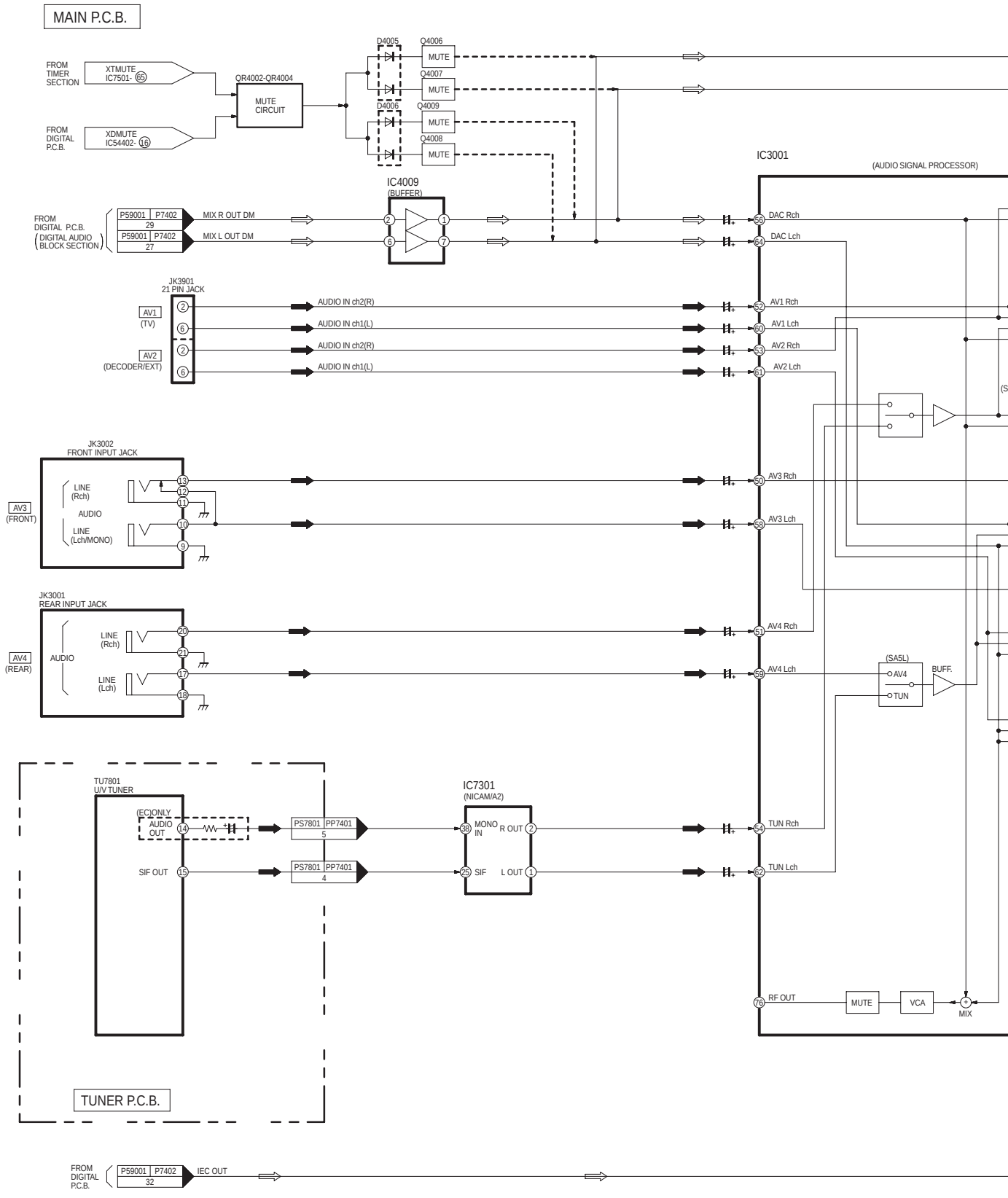

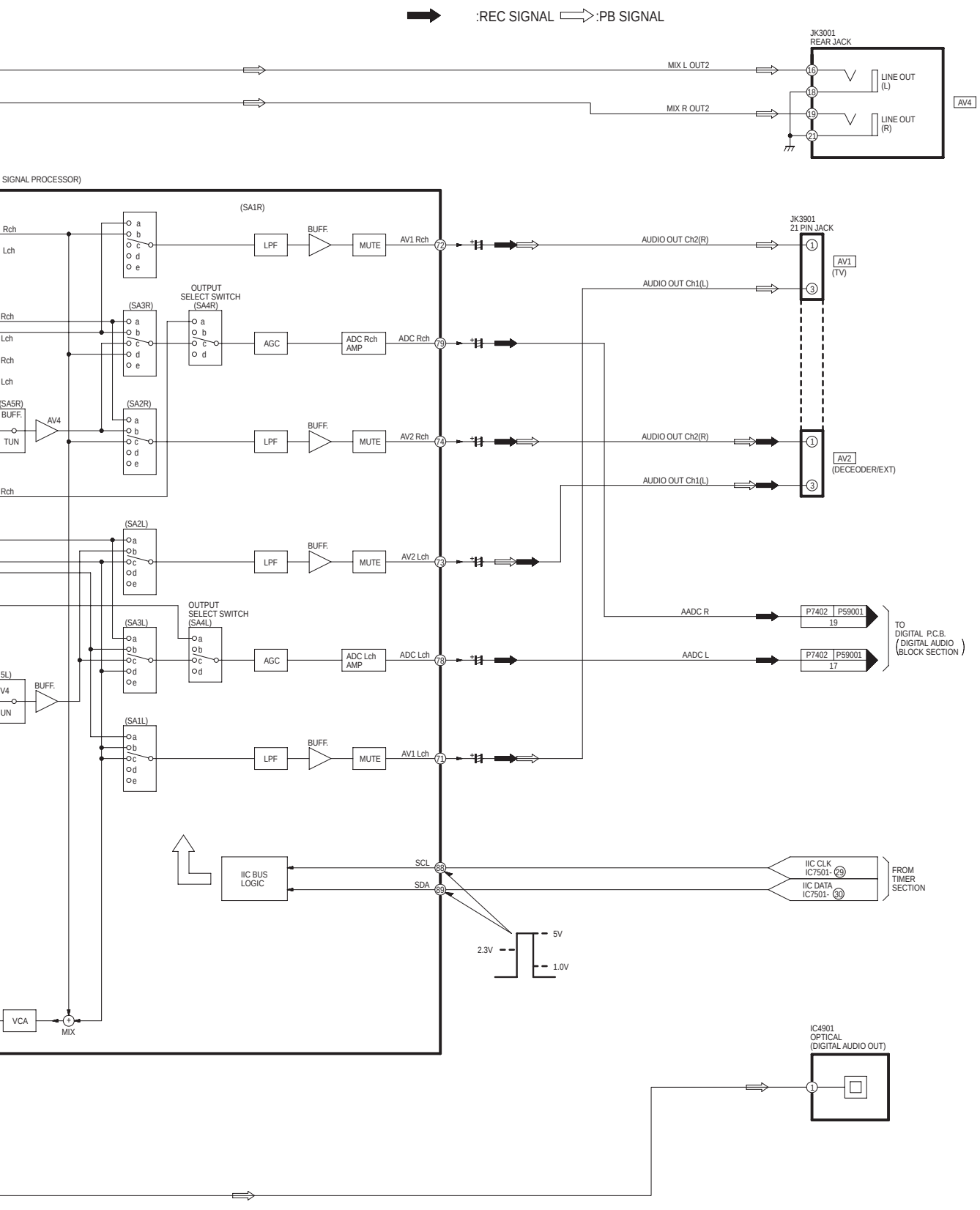

DMR-EH65EC
DMR-EH65EP
ANALOG AUDIO
BLOCK DIAGRAM

12.4. TIMER BLOCK DIAGRAM

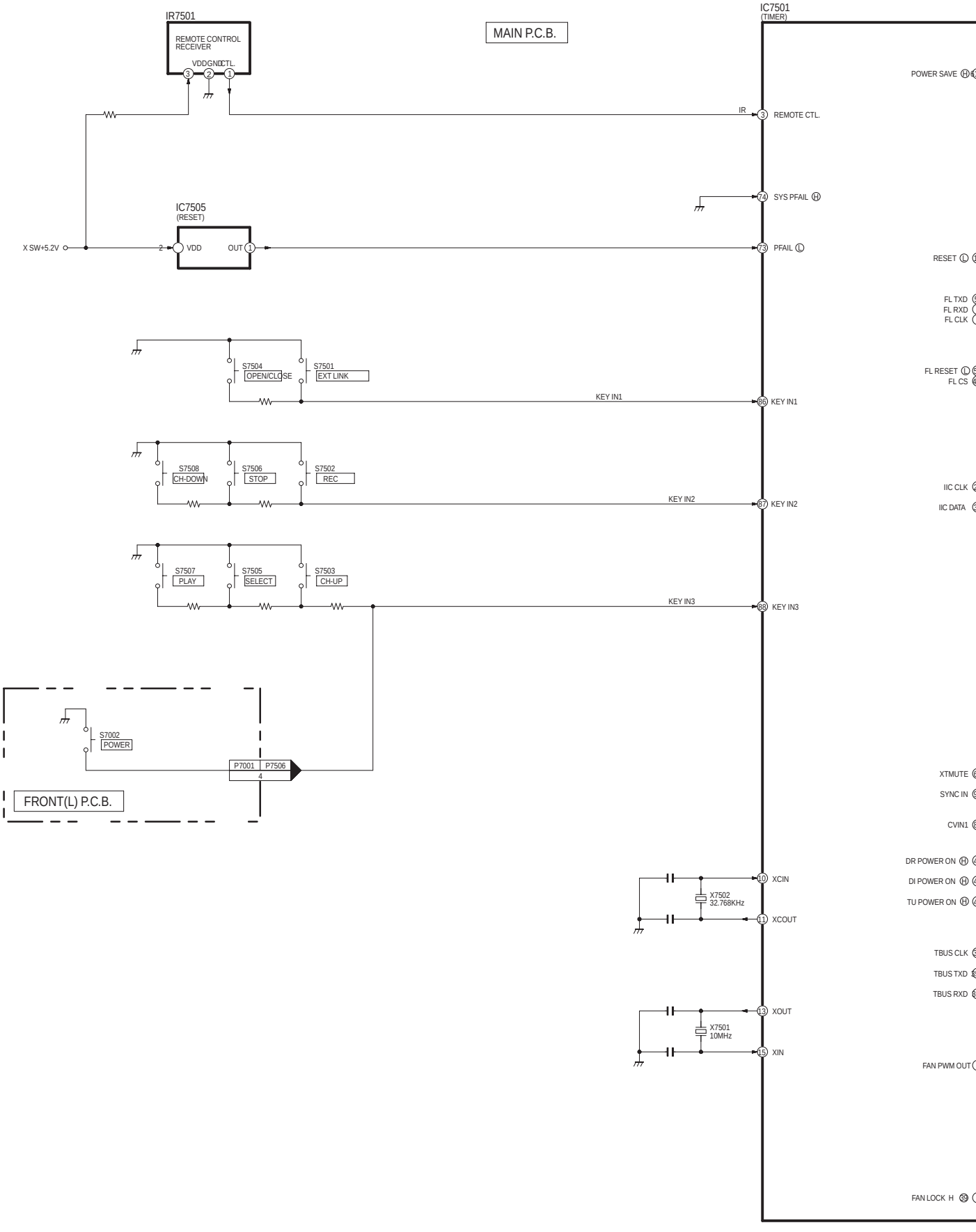

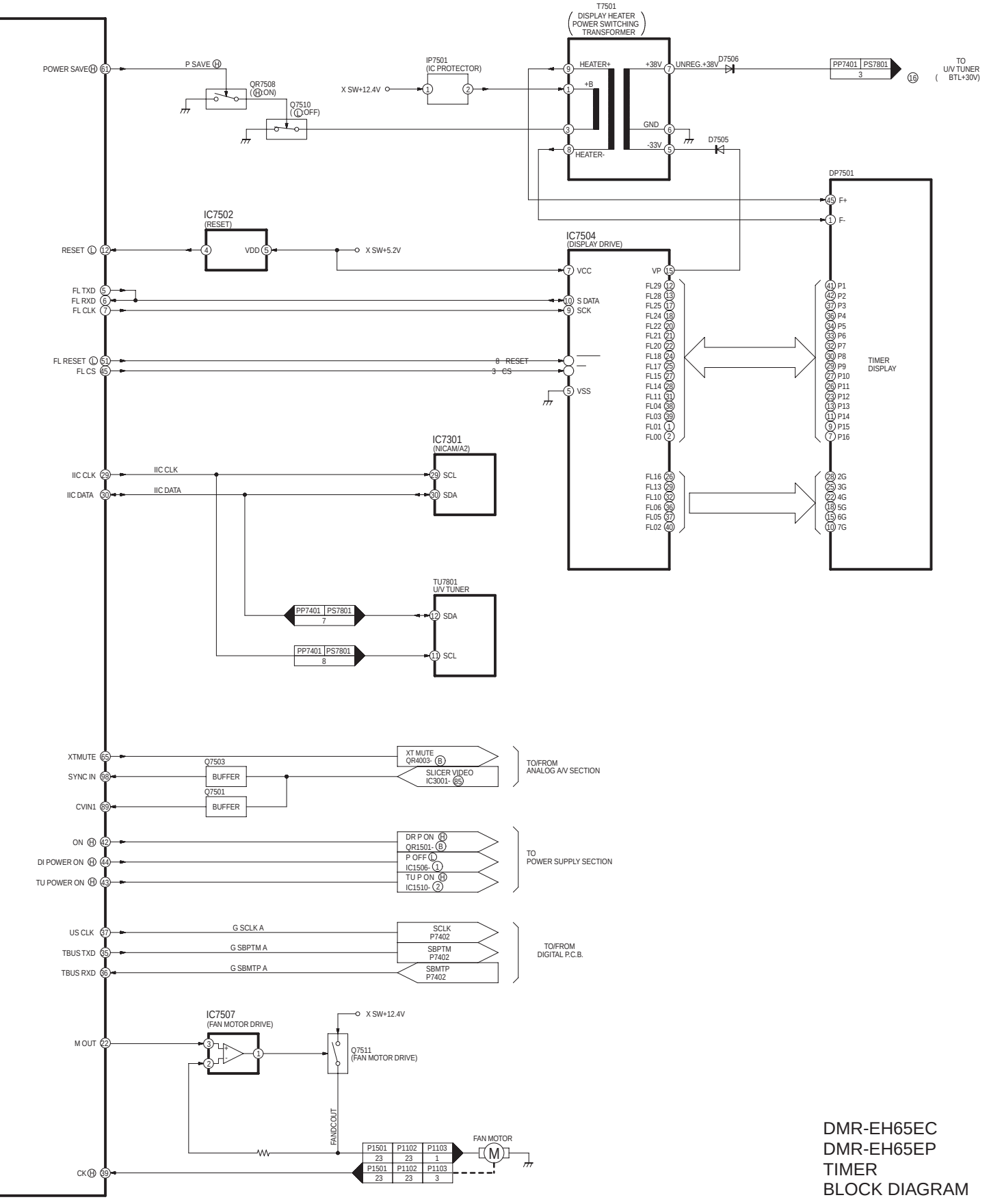

DMR-EH65EC
DMR-EH65EP
TIMER
BLOCK DIAGRAM

12.5. HDMI BLOCK DIAGRAM

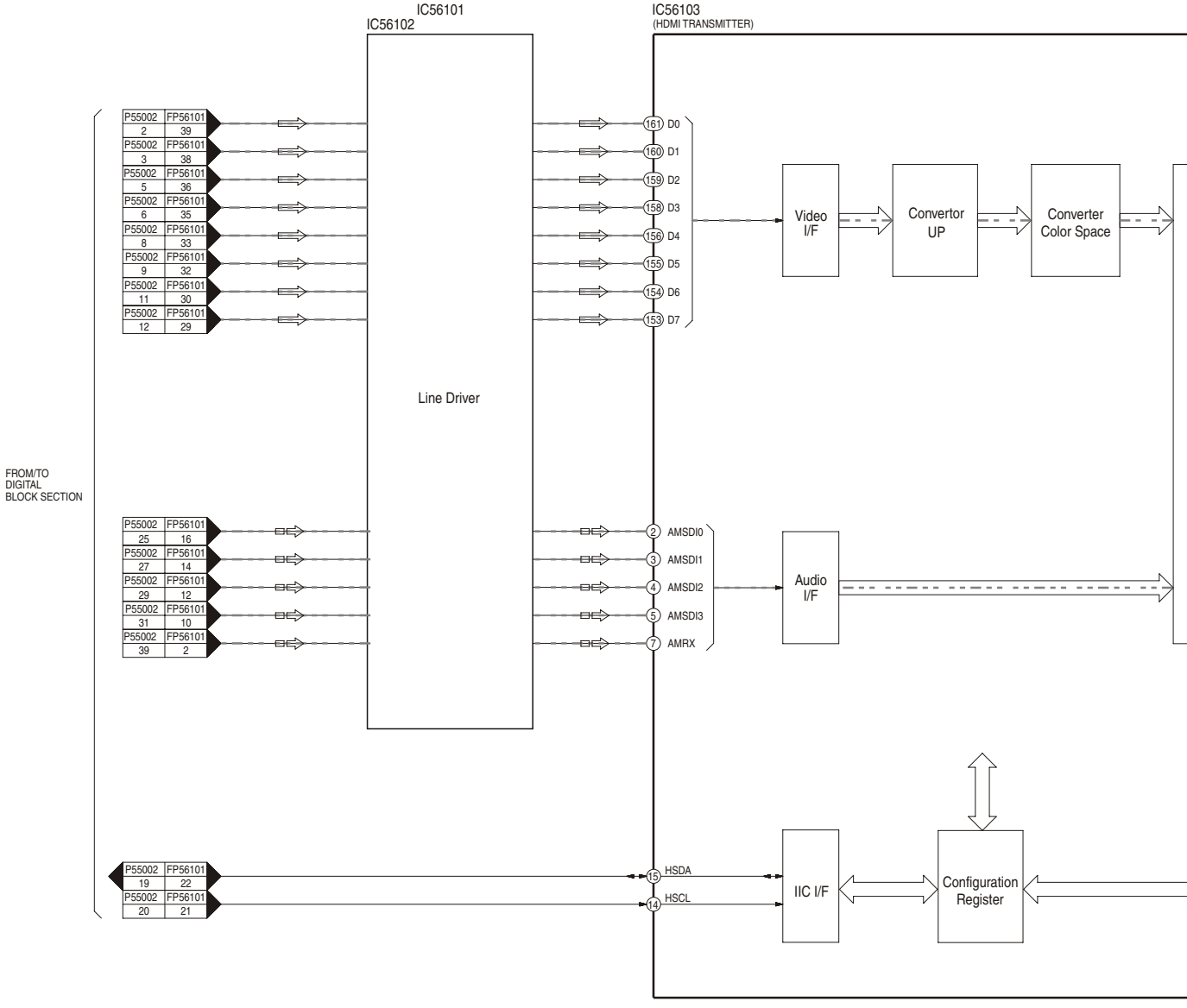

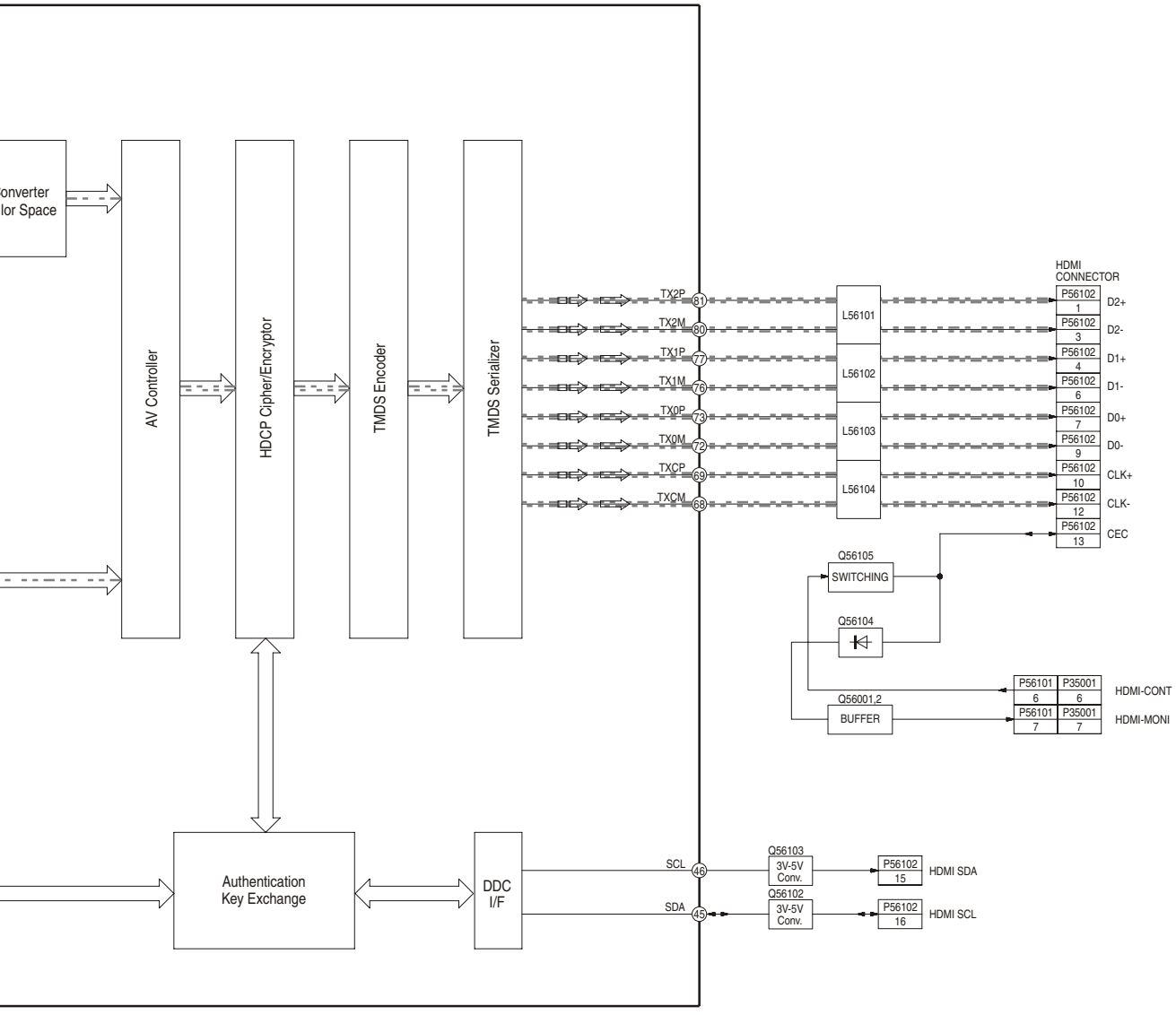

DMR-EH65EC
DMR-EH65EP
HDMI
BLOCK DIAGRAM

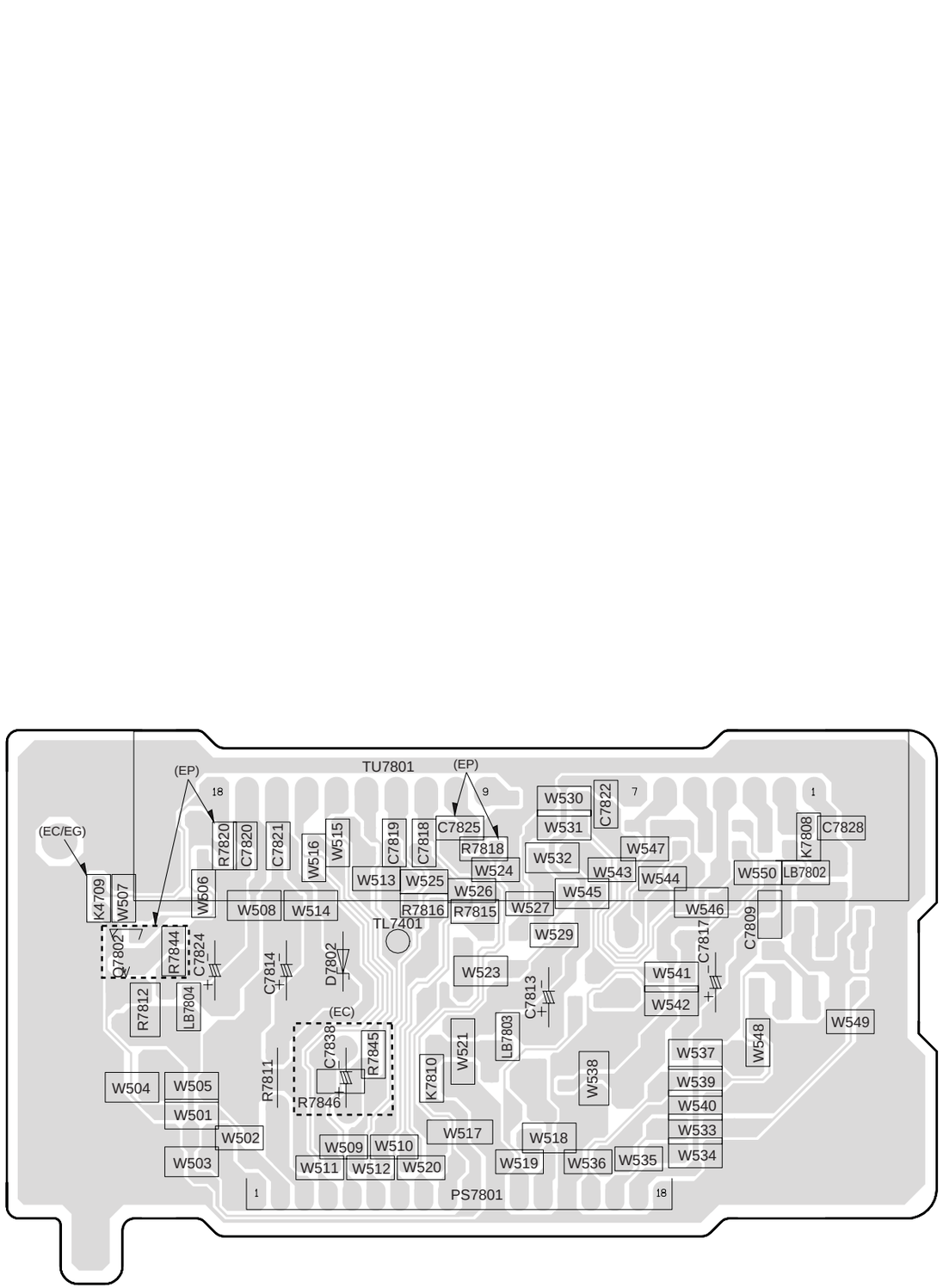

DMR-EH65EC (VEP07A91B)
DMR-EH65EP (VEP07A91D)
TUNER P.C.B

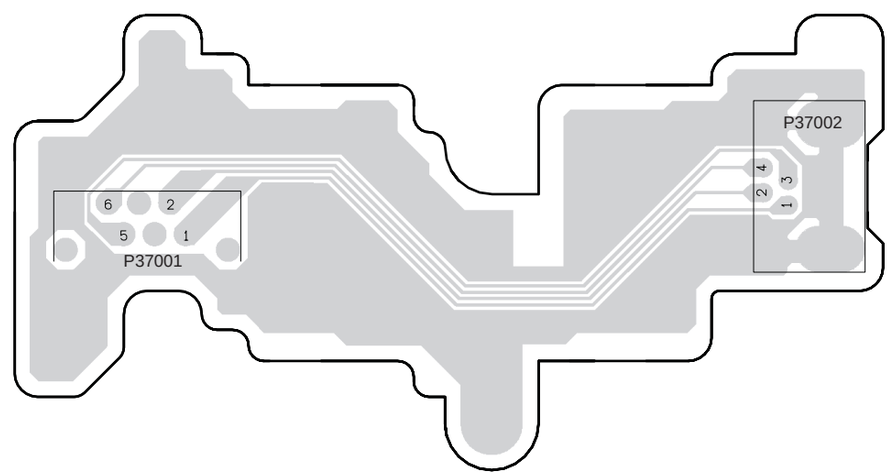

DMR-EH65EC
DMR-EH65EP
DV IN P.C.B.
VEP73135A

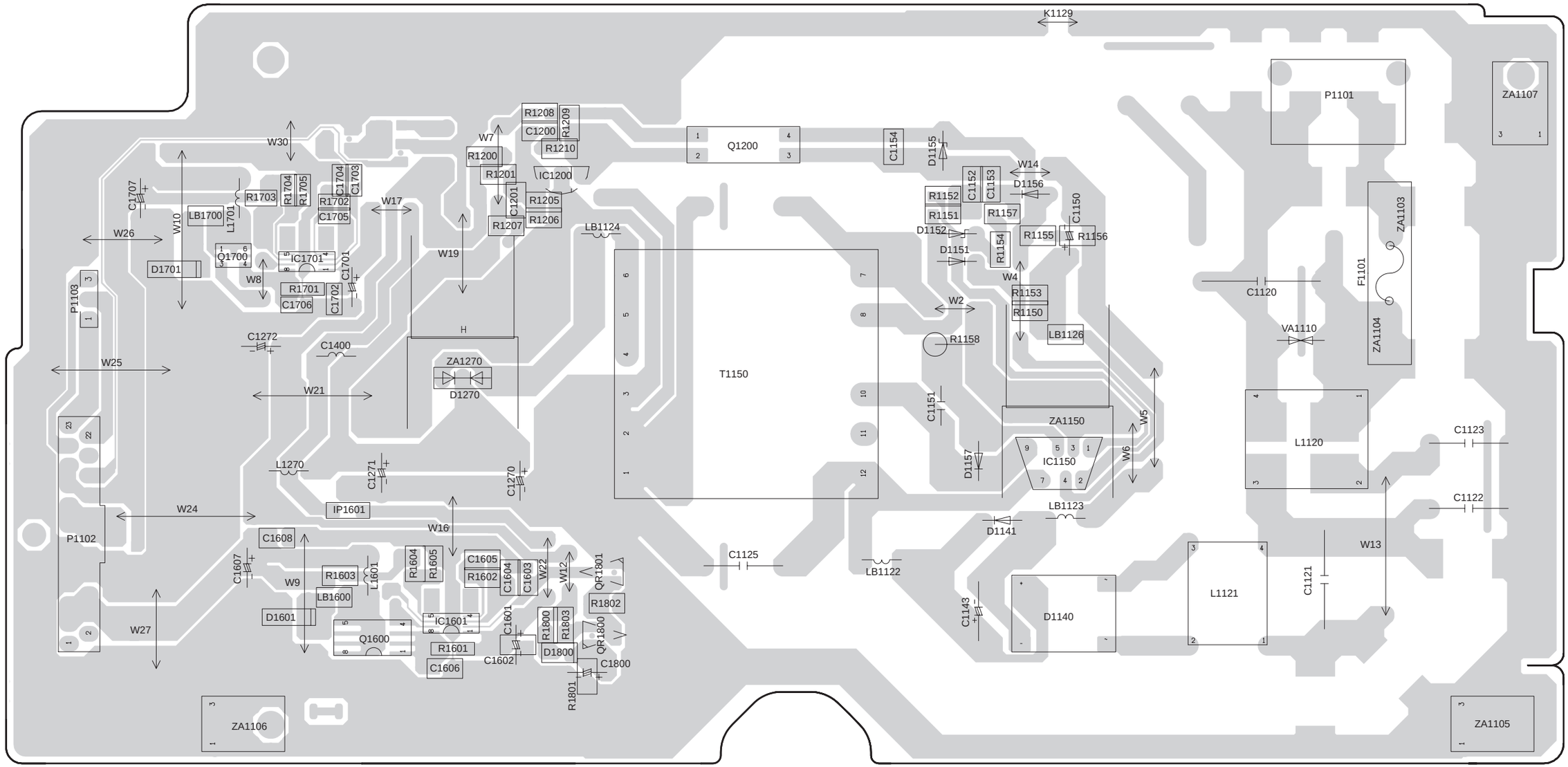

DMR-EH65EC
DMR-EH65EP
POWER
VEP71110A

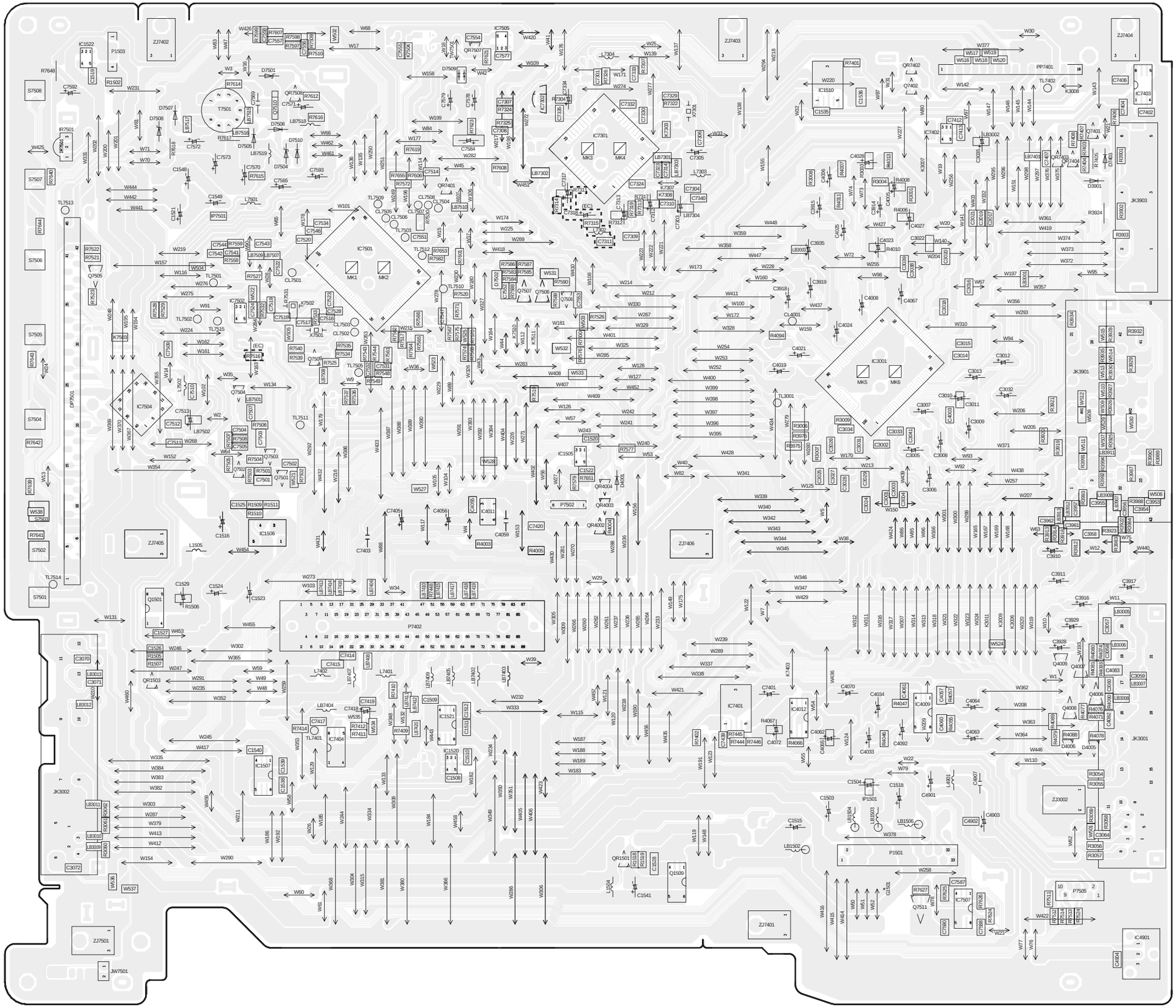

ADRESS INFORMATION			
IC1505	D5	JK3001	B9
IC1506	D3	JK3002	B1
IC1507	B3	JK3901	E9
IC1510	G7	JK3903	F9
IC1520	B4		
IC1521	C4	P1501	B7
IC1522	G1	P1503	G2
IC3001	E7	P7402	C3
IC4009	C7	P7502	D5
IC4011	D4	P7505	A8
IC4012	C7	PP7401	G8
IC4901	A9		
IC7301	F5	IP1501	B7
IC7302	G5	IP7501	F2
IC7401	C6		
IC7402	G8	DP7501	E1
IC7403	G9		
IC7404	B3	T7501	G2
IC7501	F3		
IC7502	E3	TL3001	E6
IC7504	E2	TL7401	C3
IC7505	G4	TL7402	G8
IC7507	A8	TL7501	F2
		TL7502	E2
Q1501	C2	TL7503	F4
Q1509	A6	TL7505	E3
Q4006	C8	TL7509	F3
Q4007	C9	TL7510	E4
Q4008	C8	TL7511	E3
Q4009	C8	TL7512	F4
Q7401	G9	TL7513	F1
Q7402	G7	TL7514	D1
Q7501	D3	TL7515	E2
Q7502	D3		
Q7503	D3	TW7501	G4
Q7504	E3		
Q7505	F1	X7301	G6
Q7506	E5	X7501	E3
Q7507	E5	X7502	E3
Q7508	E5		
Q7510	G3		
Q7511	A7		
QR1501	B5		
QR1503	C2		
QR4002	D5		
QR4003	D5		
QR4004	D5		
QR7401	F4		
QR7402	G7		
QR7403	F8		
QR7404	F8		
QR7507	G4		
QR7508	G3		

DMR-EH65EC (VEP79119L)
DMR-EH65EP (VEP79119M)
MAIN PCB

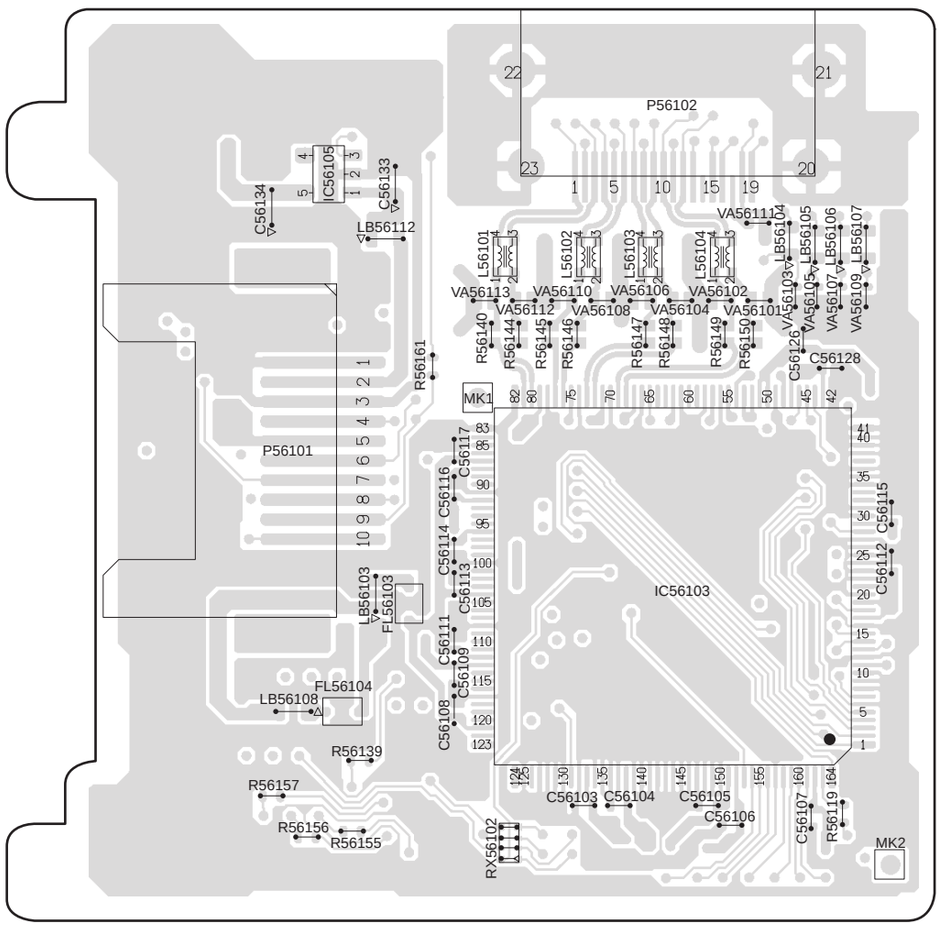

COMPONENT SIDE

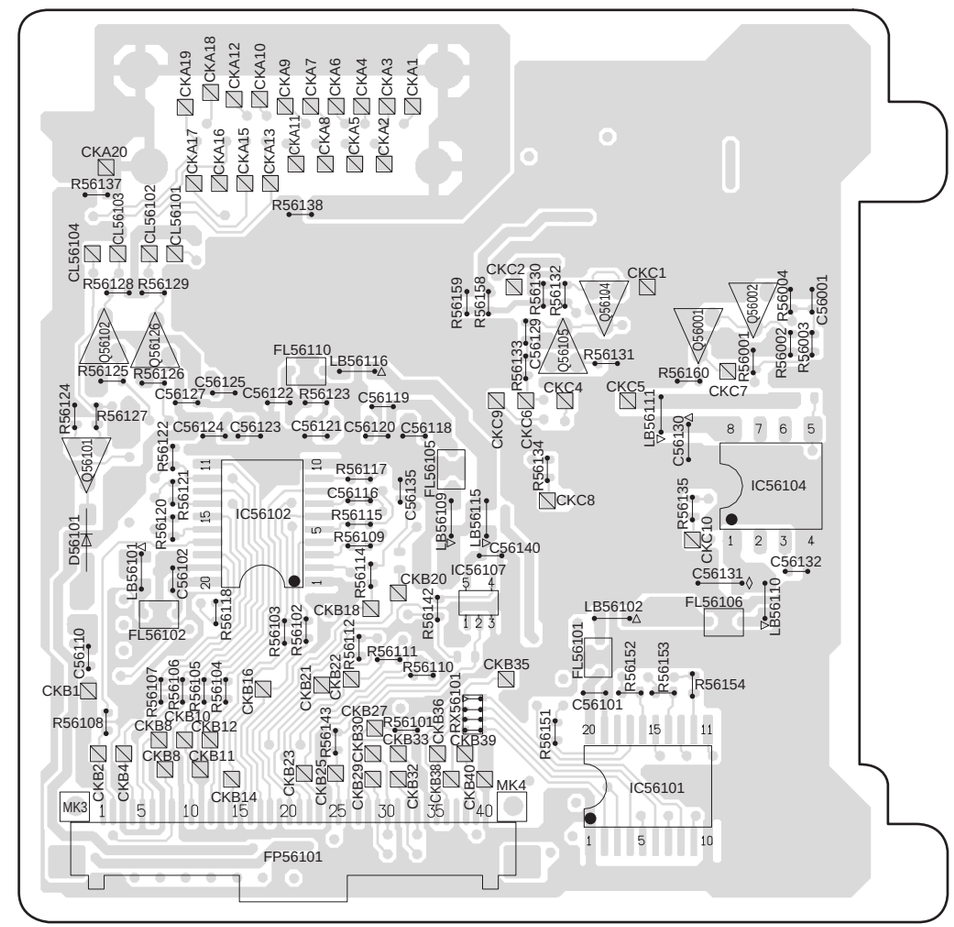

SOLDER SIDE

DMR-EH65EC
DMR-EH65EP
HDMI P.C.B.
VEP73137A

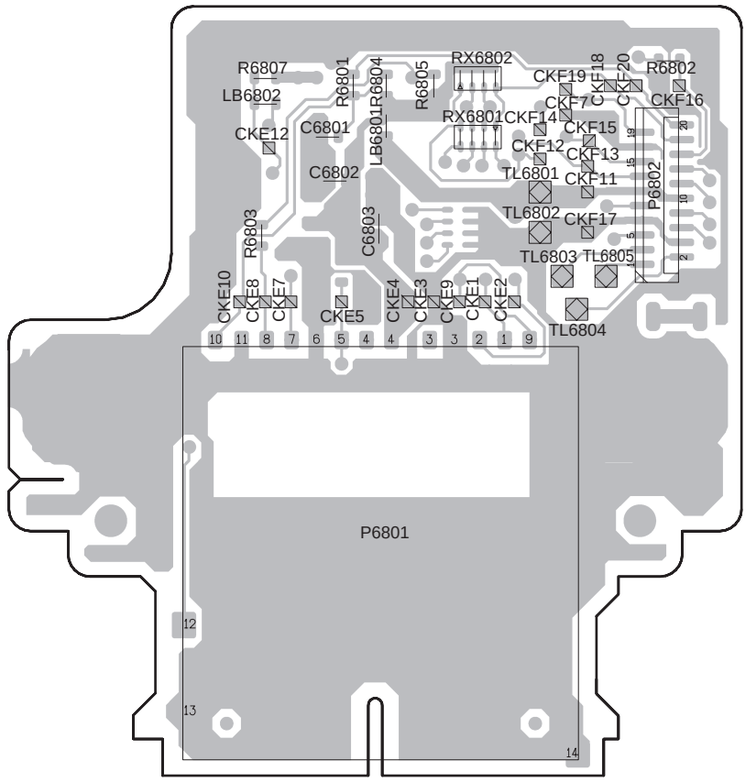

DMR-EH65EC
DMR-EH65EP
SD CARD
VEP73136A

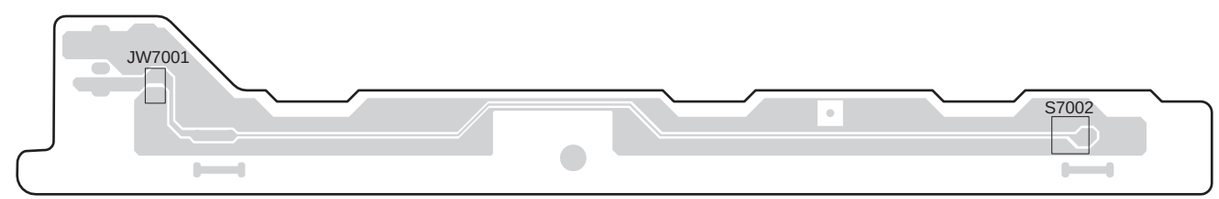

DMR-EH65EC
DMR-EH65EP
FRONT
VEP70161A

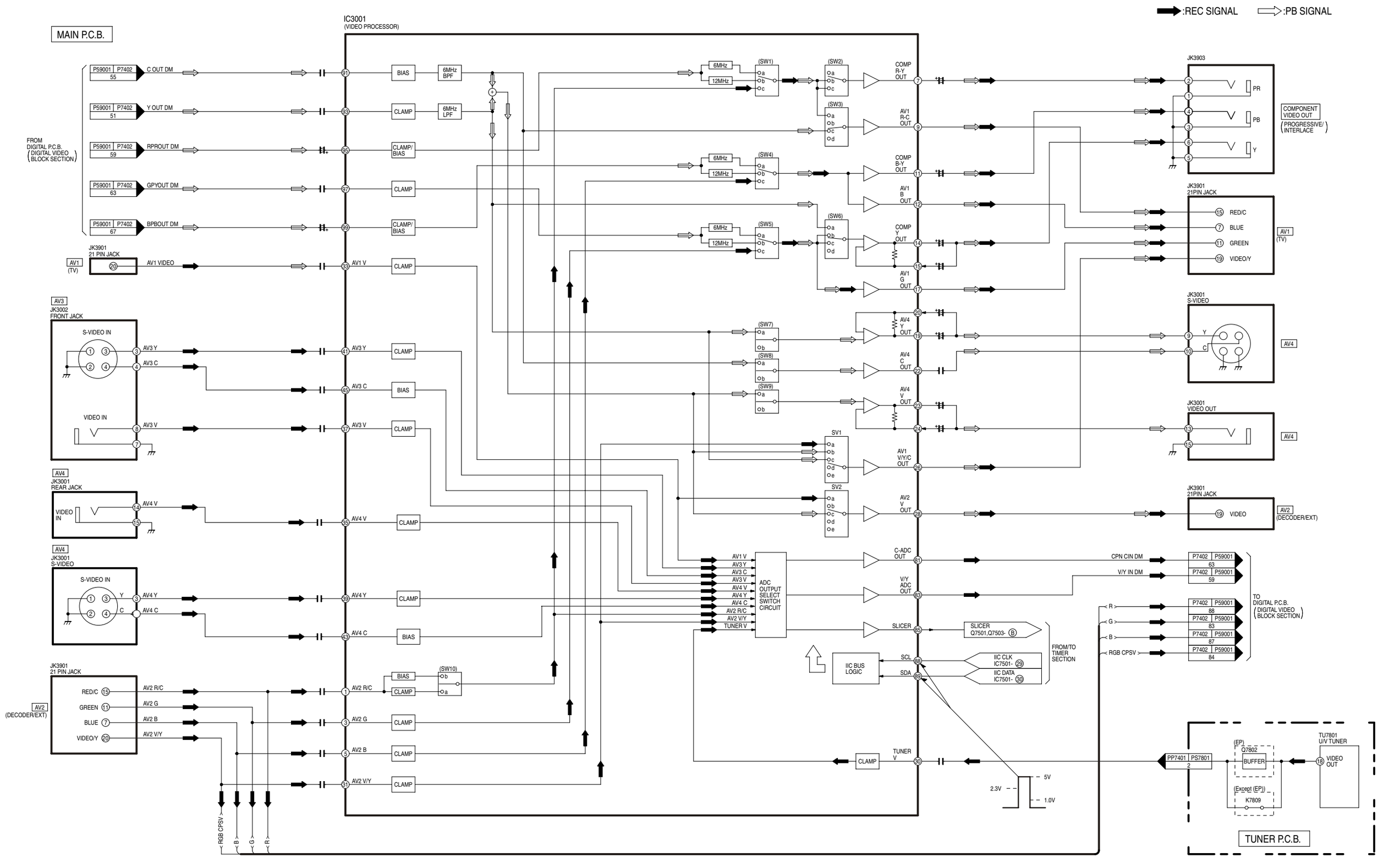

DMR-EH65EC
DMR-EH65EP
ANALOG VIDEO
BLOCK DIAGRAM

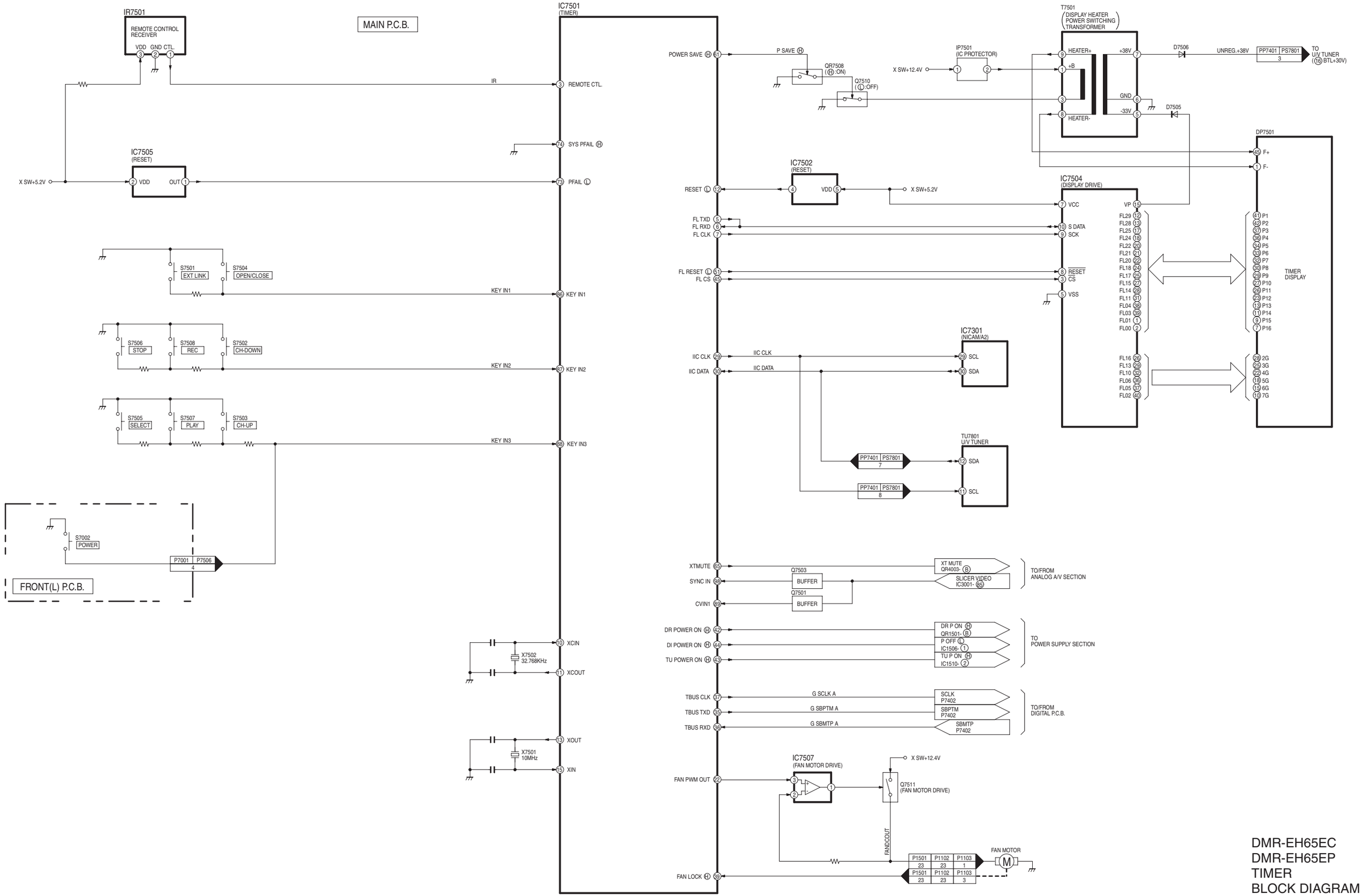

DMR-EH65EC
DMR-EH65EP
TIMER
BLOCK DIAGRAM

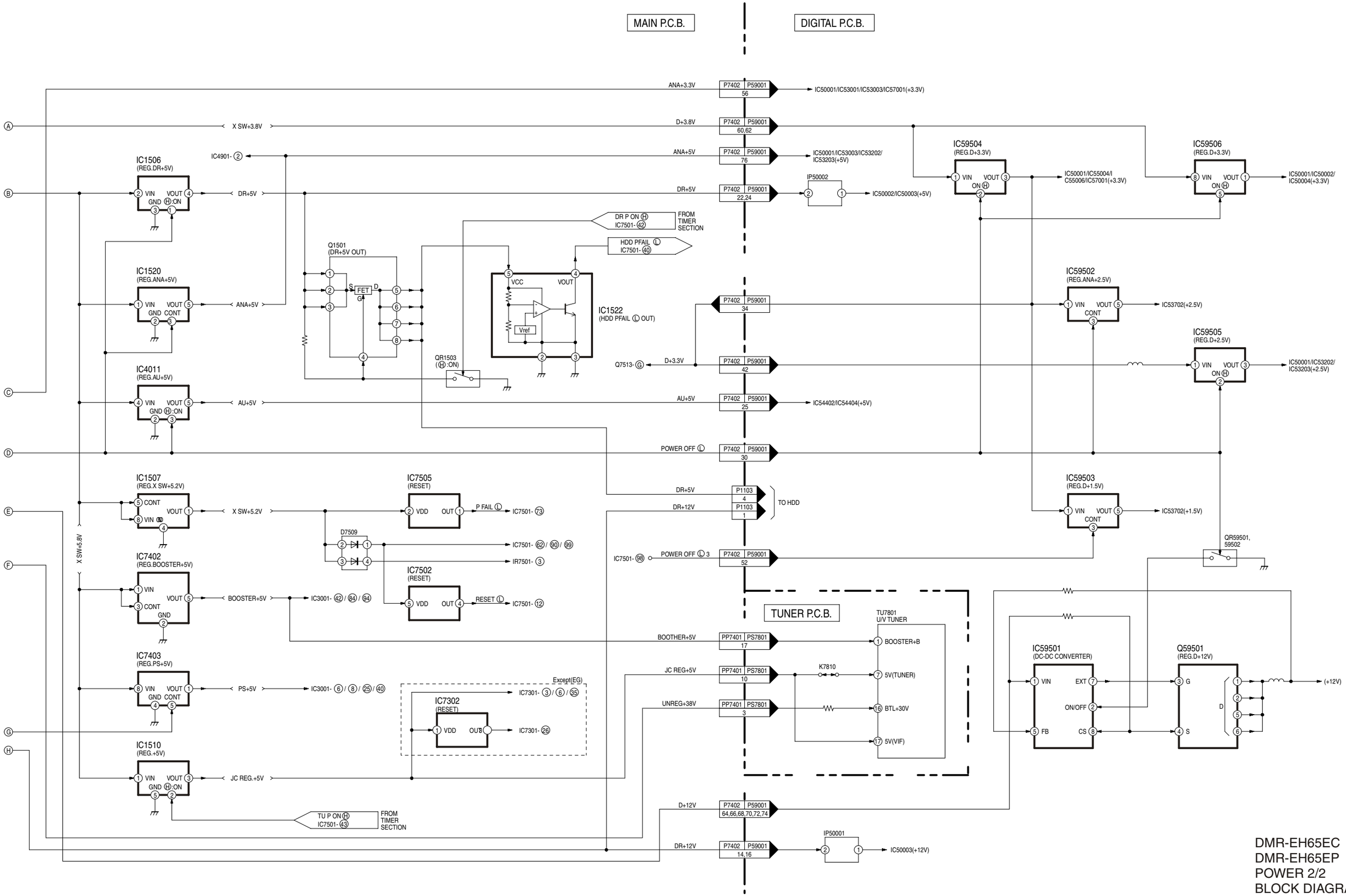

DMR-EH65EC
DMR-EH65EP
POWER 2/2
BLOCK DIAGRAM

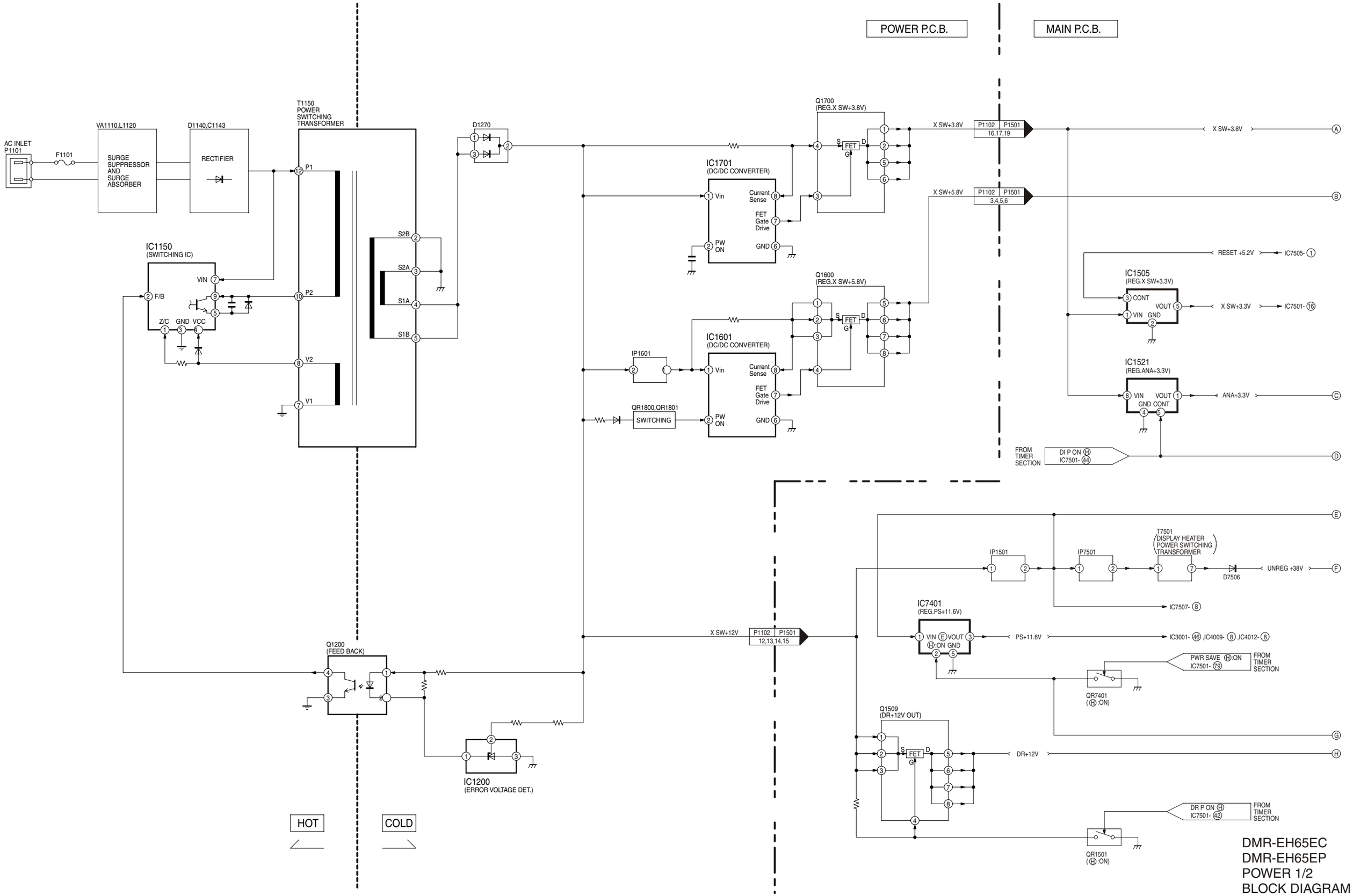

DMR-EH65EC
DMR-EH65EP
POWER 1/2
BLOCK DIAGRAM

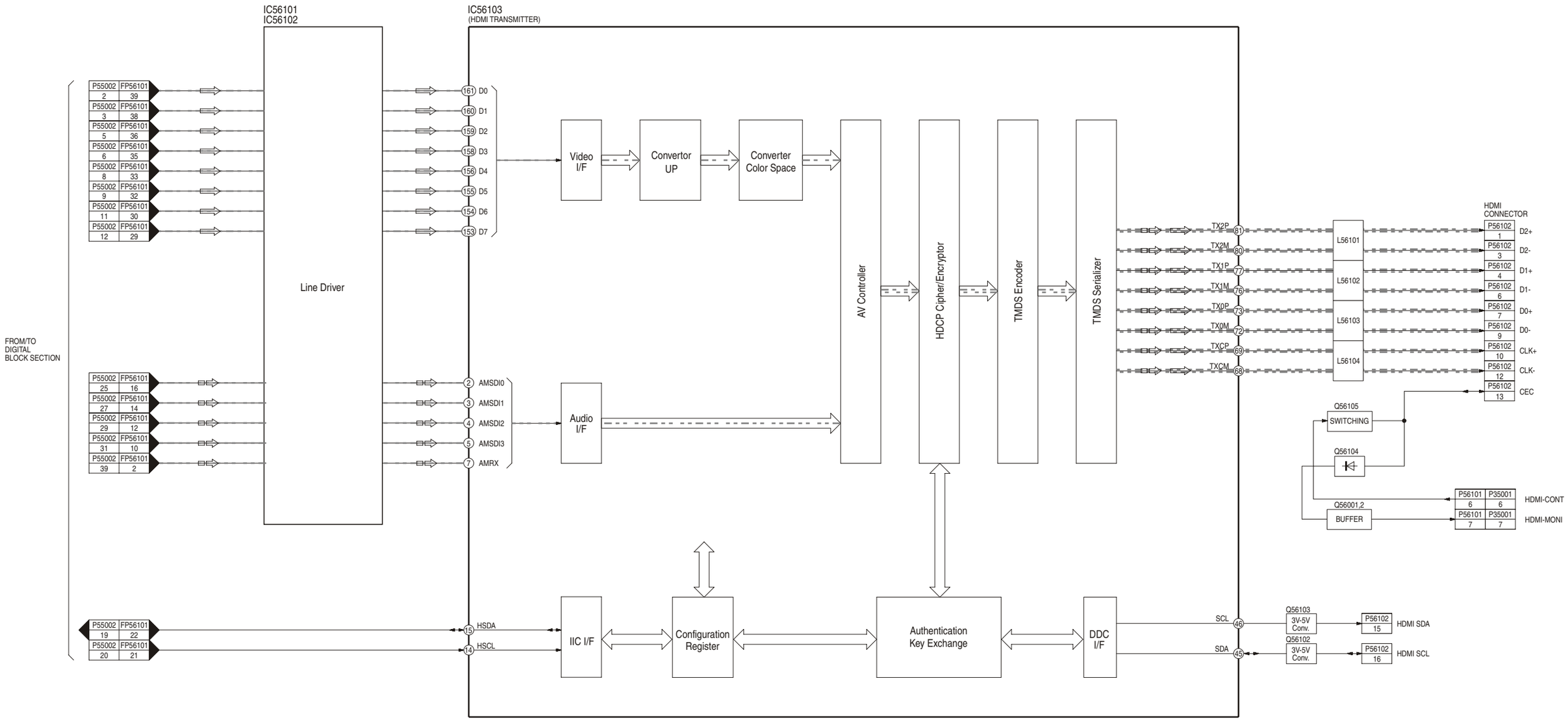

DMR-EH65EC
DMR-EH65EP
HDMI
BLOCK DIAGRAM

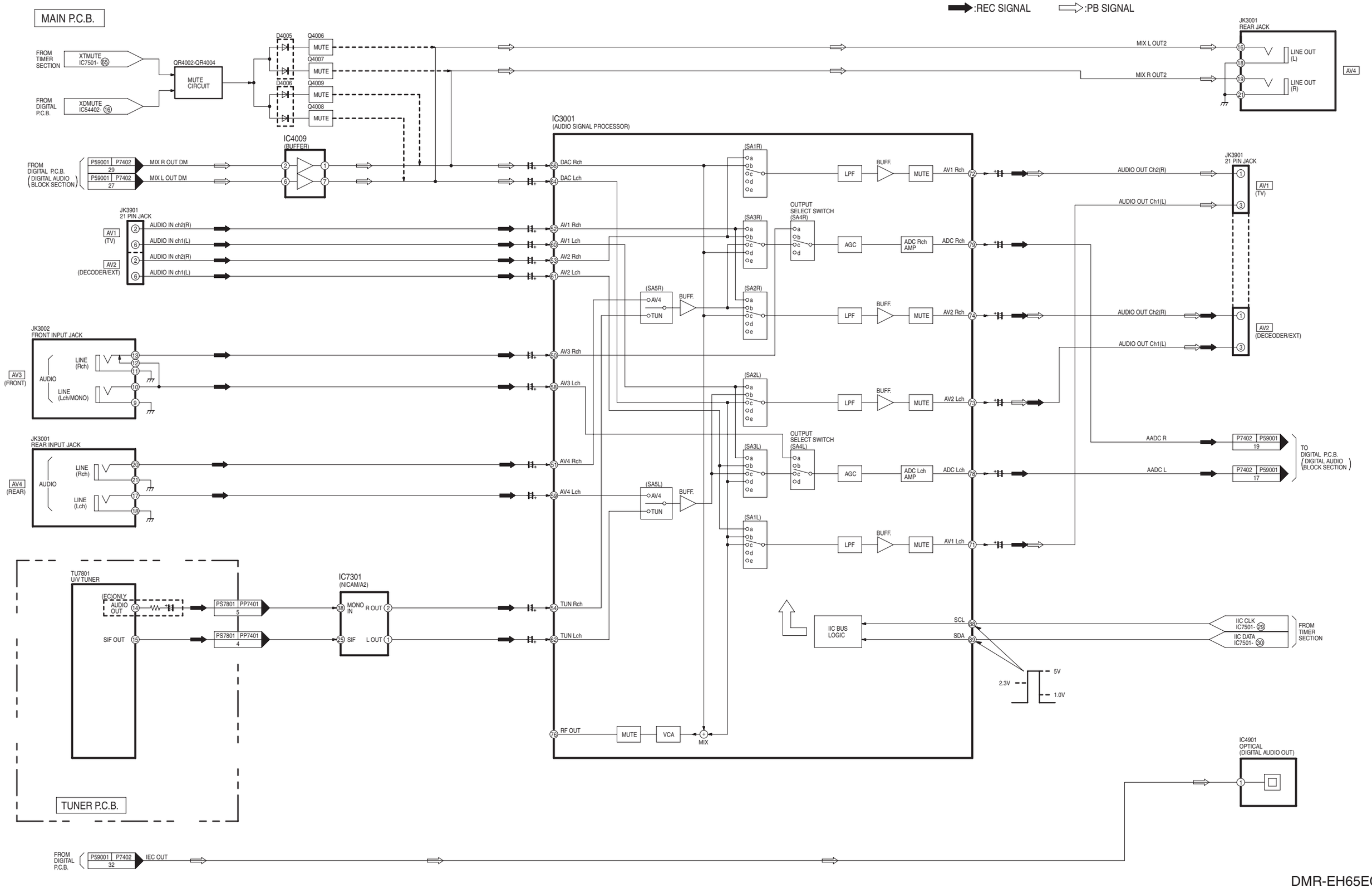

DMR-EH65EC
DMR-EH65EP
ANALOG AUDIO
BLOCK DIAGRAM